$100.00

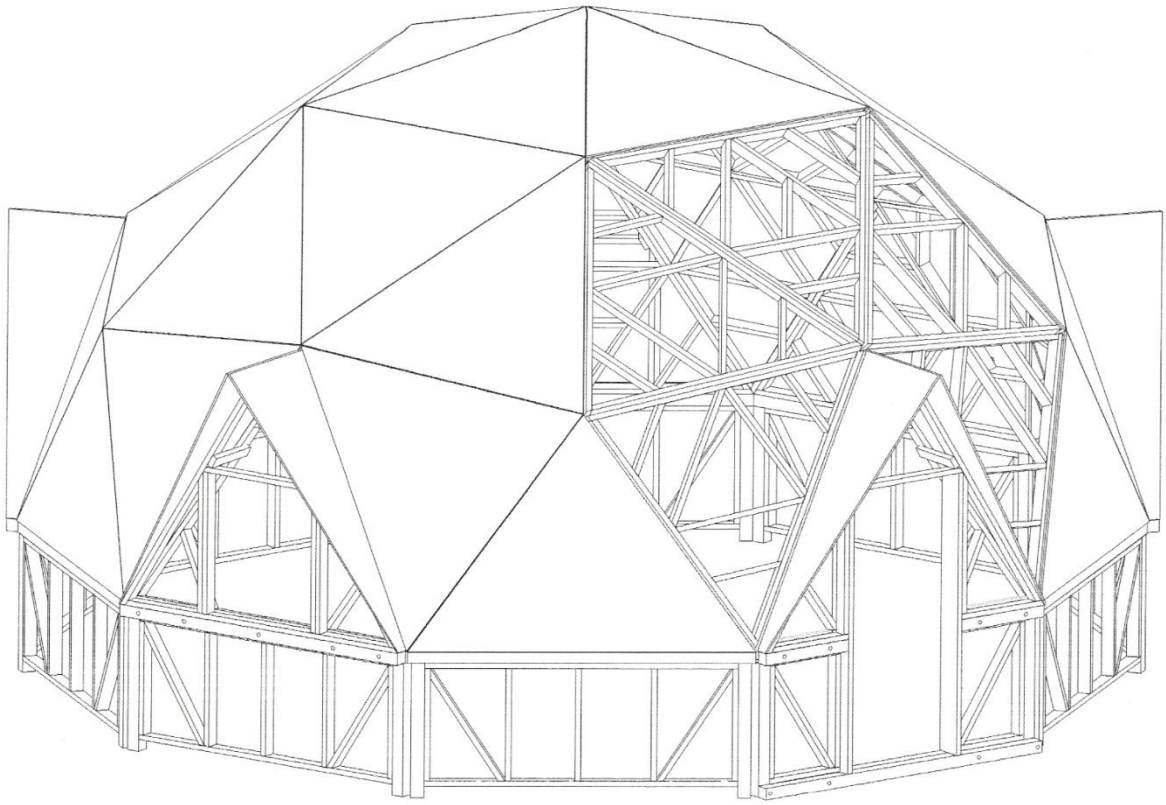

24' Diameter Dome

(Type IIb)

(exterior insulation)

(2x4 construction)

(revised 1/14/02)

24dom3eb.dwg
10/13/97 rlc
revised 3/30/01 rlc

Basic 24' Fabrication and Erection

(24' Diameter Mountain Truss)

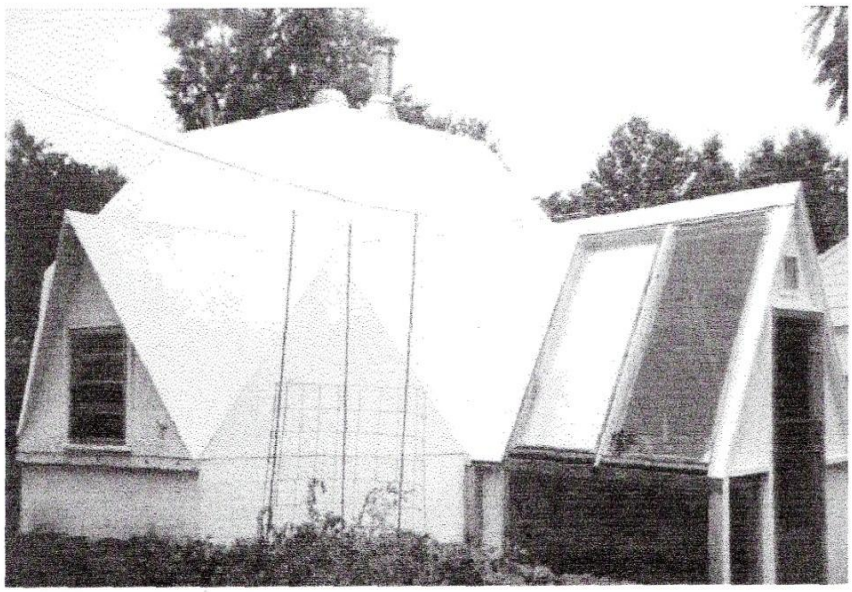

The fabrication process starts with selecting superior grade lumber and the regrading of the lumber according to straightness. The straightest lumber being separated for use as long members. The next step is to cut the lumber for the equal lateral panels and the accurately assemble an equal lateral panel which is to be used as a pattern. Once this is done, the pattern panel, which is to be equiped with positioning cleats, is to be used as a guide for the rest of the 10 equal lateral panels. Next the same procedure is used to fabricate the 30 pentagon panels. The next step is to fabricate the connecting wedges and then cut and predrill the sheathing using a cutting jig.

Note: Booklet does not come with attached greenhouse plans

24fabcov.pbs1
revised 3/28/01 rlc
revised 12/30/03 rlc

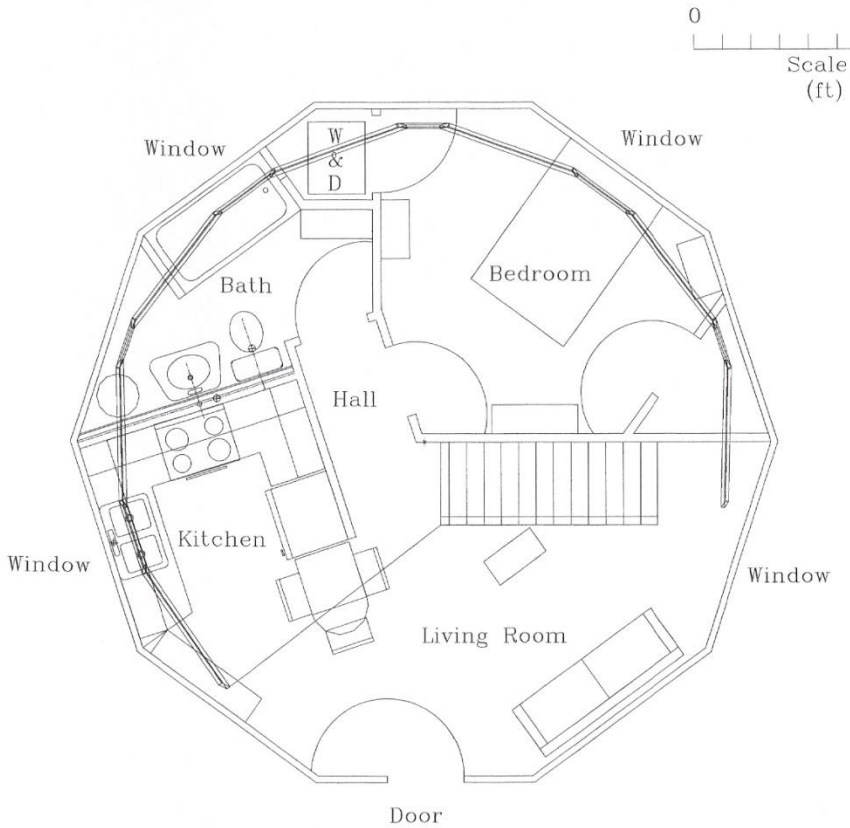

1st Floor Plan

(430 s.f.)

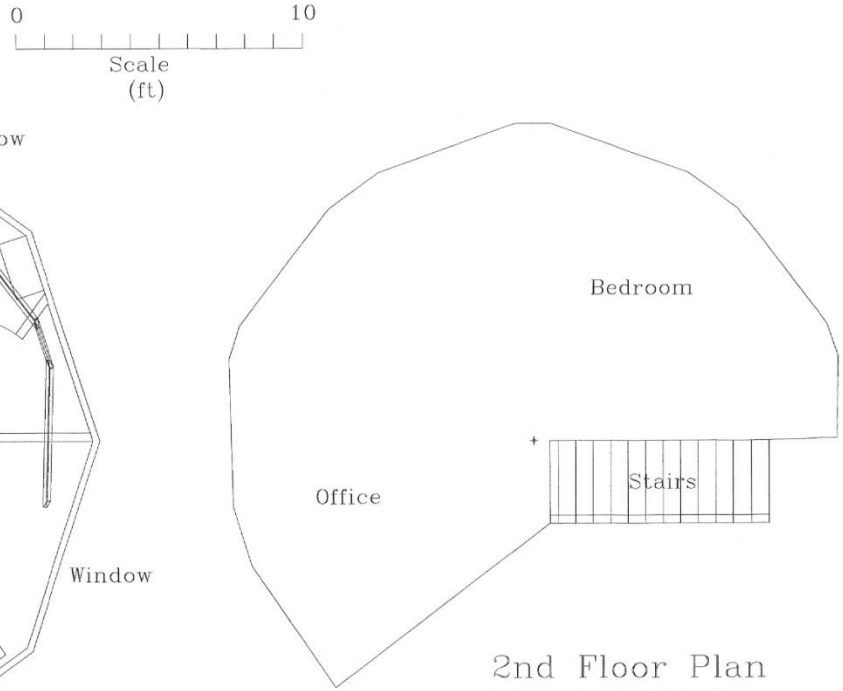

2nd Floor Plan

(240 s.f.)

0 10

Scale
(ft)

24' Diameter Mountain Truss Dome

Type IC

24plan2.gif
24domt3b.dwg
24plan2.dwg.
11/23/97 rlc
revised 12/25/03 rlc

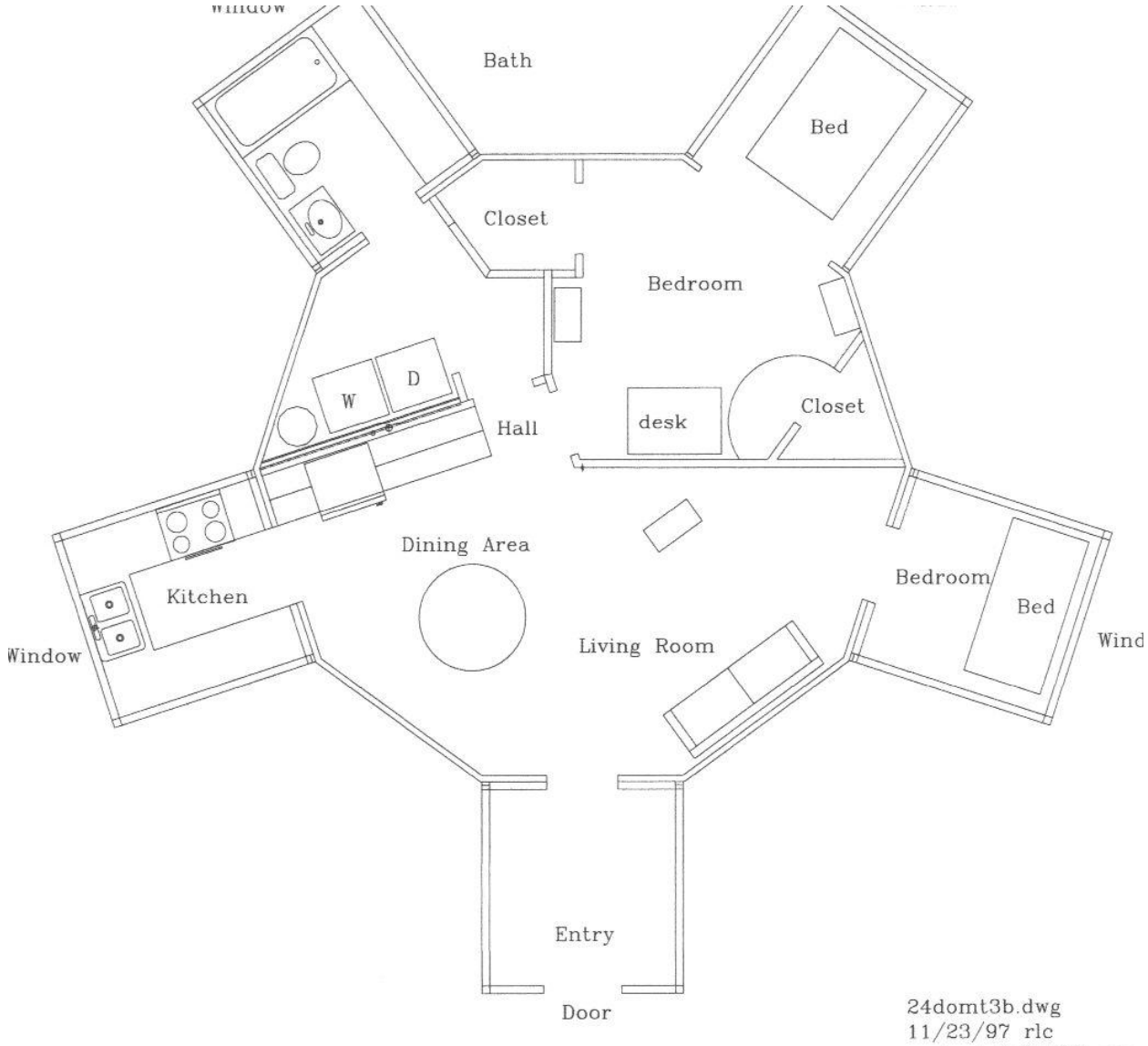

24domt3b.dwg
11/23/97 rlc
revised 9/24/07 rlc

1st Floor Plan

(680 s.f.)

24' Diameter Dome with Alcoves

(Single Floor)

24’ Diameter Dome

This is a precision structure. One must use precise jigs in its fabrication. The measurement tolerances are 1/32", while the overall tolerances are 1/16".

I recommend that the lumber be delivered in an unopened bundle and then regraded according to quality and straightness. The first panels made, which are to be set up as patterns for the fabrication of the following panels, should be constructed of the straightest and best of the lumber. The rest of the lumber should be graded into four categories. The best and straightest being used for the long members. The next best being used for the intermediate members, and the 3rd category be used for the short members. Those that have an appreciable long axis bow or that are twisted, should not be used. The moisture content of the lumber should be uniform and close to that of the sheathing.

When assembling the panels, using a pattern panel, with 1" x 4" x 6" cleats for positioning, I would recommend using at least two 3" coated deck screws per connection, or three galvanized #12 nails per connection. Care should be taken in the positioning of the connectors and the angle of entry. For moderate loading of 30 psf., 2 screws/ connection is adequate. For heavy loading of 100 psf, 3 screws/connection will be necessary. Higher loading will require additional steps to be made both regards to the individual panels and the knee wall support.

The connecting wedges are to be tacked in place prior to assembly of the truss, two on the right side of each panel. I recommend that 18 x 1-1/4" wire nails be used to connect the wedges to the individual panels.

When assembling the truss, care should be taken in not forcing bolts into their holes with undo force. An aligning tool may be used in aligning the panels. This is a precision design, if the bolt doesn't insert without undo force, then it is probably not aligned with the adjoining panel. An exception being if the base knee wall was not correctly positioned or is not level. Therefore, make sure that the base plate bolt holes are drilled slightly large to allow for some lateral adjustment during the initial assembly.

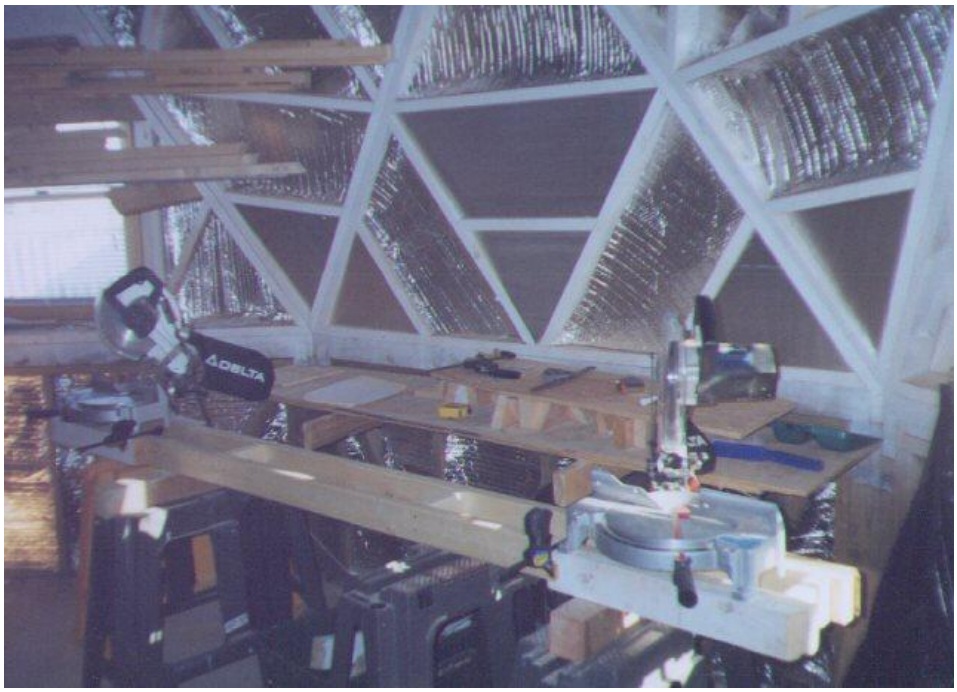

The cutting jig consist of two power miter saws mounted on 2x4 runners which track along a 2x4 rail. Squeeze clamps are used to hold the runners and saws in place. Care must be taken in aligning the saws as well as using straight lumber for the rail.

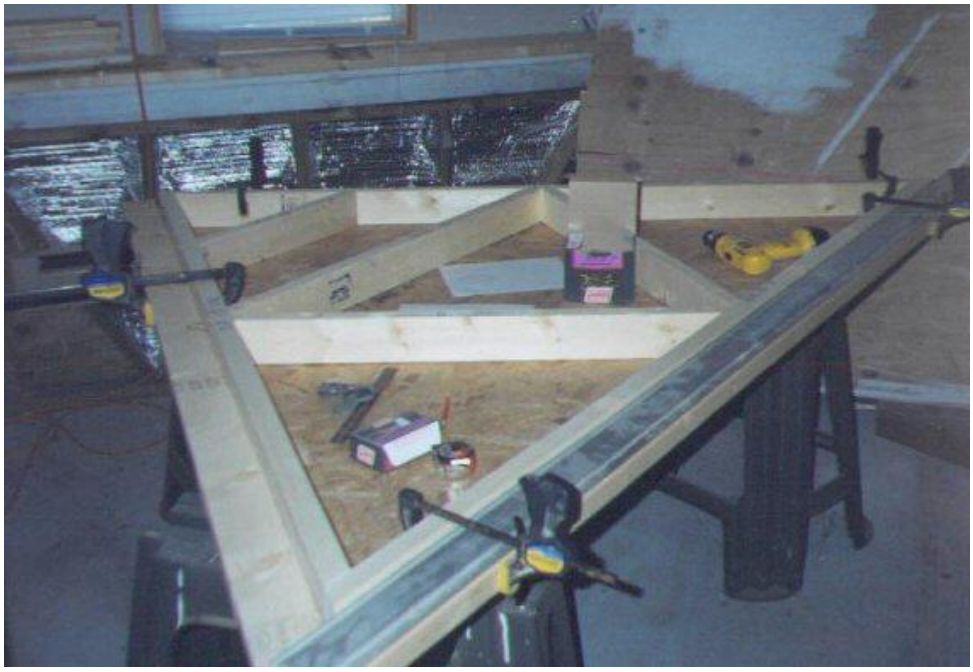

Patterns are used for laying up the panels. In laying up the patterns, care must be used in choosing straight lumber and then placing the brace boards in the correct position.

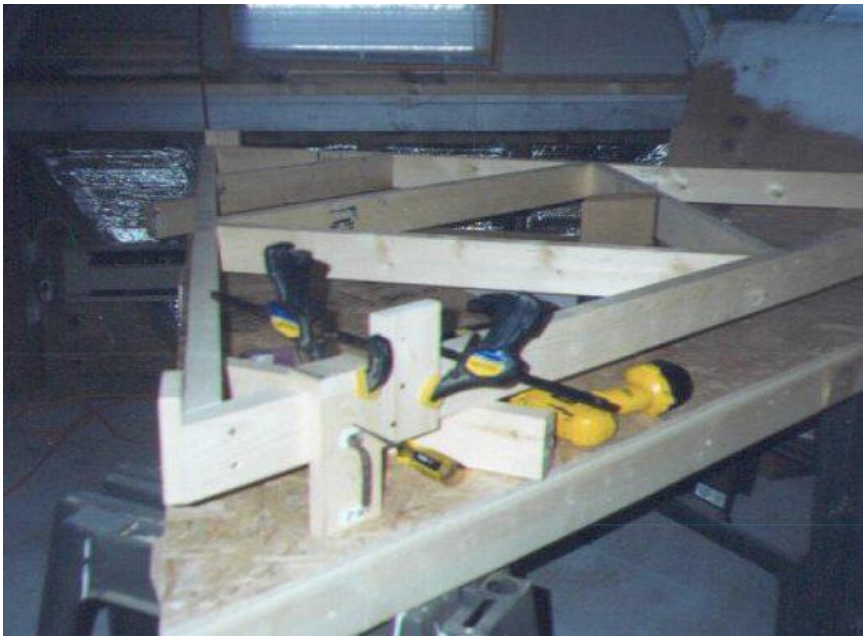

Positioning cleats are attached to the pattern panel by first clamping marking awl jig to pattern panel at correct position and the connecting positioning cleat with 2” screws. The connecting hole needs to be remarked with marking awl because the weight of the power drill pulls the drill guide off the line if not prepositioned.

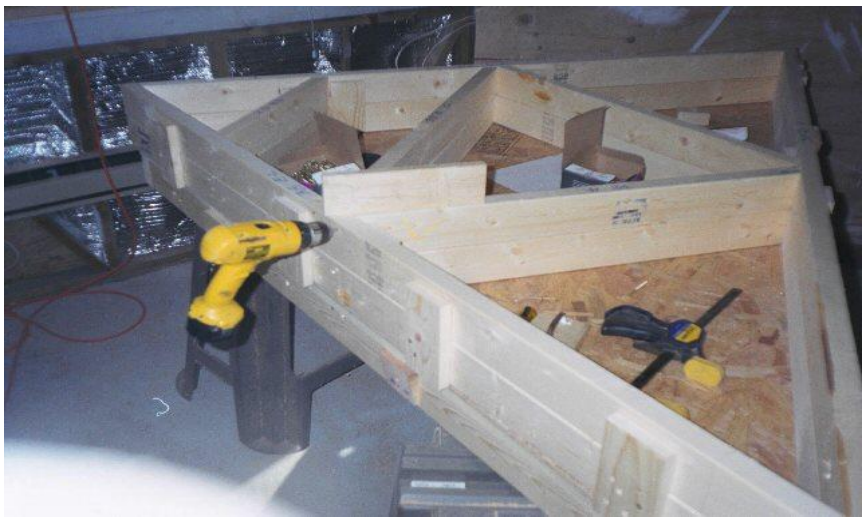

Use a minimum of two 3” coated deck screws per connection. If coated nails are used, be sure they are in a cleating type manner.

Using accurate positioning cleats as a guide, mark the position of the bolt connection hole by using a movable capped & drilled block along with a marking awl.

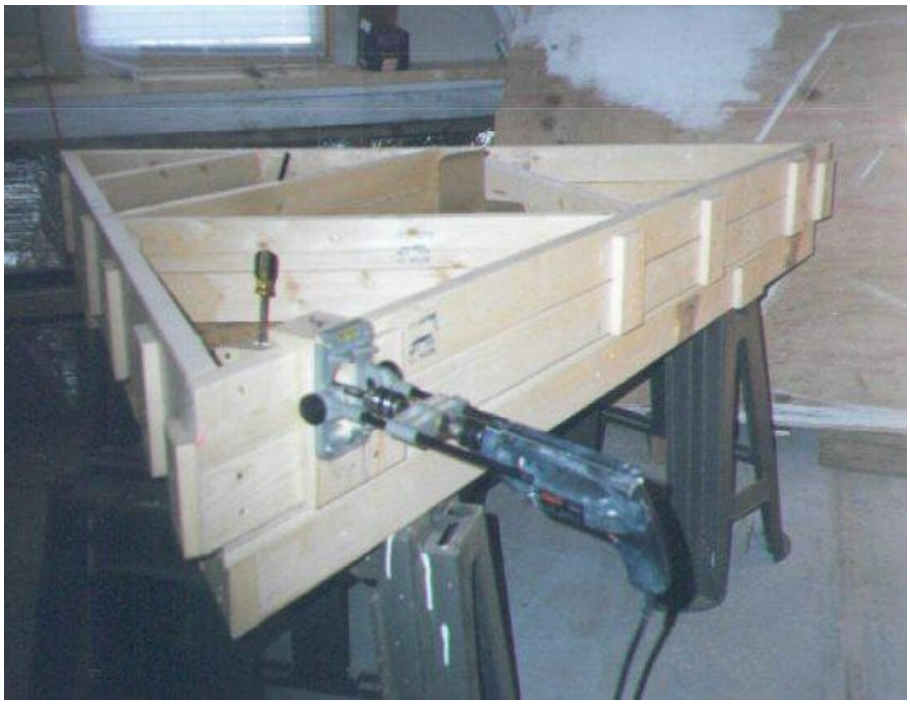

Using a drill guide, attached to a movable hugging bracket, set at an upslope angle of 10 degrees, drill 1 ¾” down from the top of the 2x4 panel. Use the accurately set stop blocks to precisely position the bolt hole drilling apparatus.

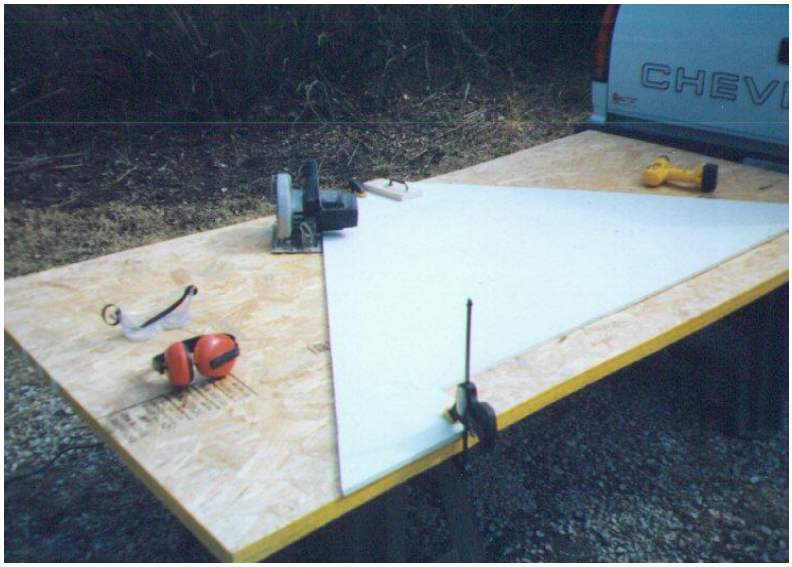

Multiples of up to 4 sheets of OSB sheathing can be cut using a power saw and the cutting pattern. This photo is of a Black & Decker use pattern which shows the top narrow edge of pattern being aligned with the edge of the multiple sheets. An extension board is clamped at the bottom of the pattern to allow a continuous accurate straight cut. For this updated SKIL saw version, the cutting jig will have the wide edge of the pattern in alignment with the OSB edge and the extension board is used at the narrow end. Another option is to trace a full size sheathing pattern onto the OSB stack and cut along trace. When Seal & Peel roofing is used, the smooth side of the OSB is orientated to the surface. The opposite is required for standard 3 tab roofing.

Use the exterior OSB sheathing as a pattern for cutting the insulation. The insulation is cut using a long break away utility knife. The insulation is cut at an inward angle of approximately 10 degrees.

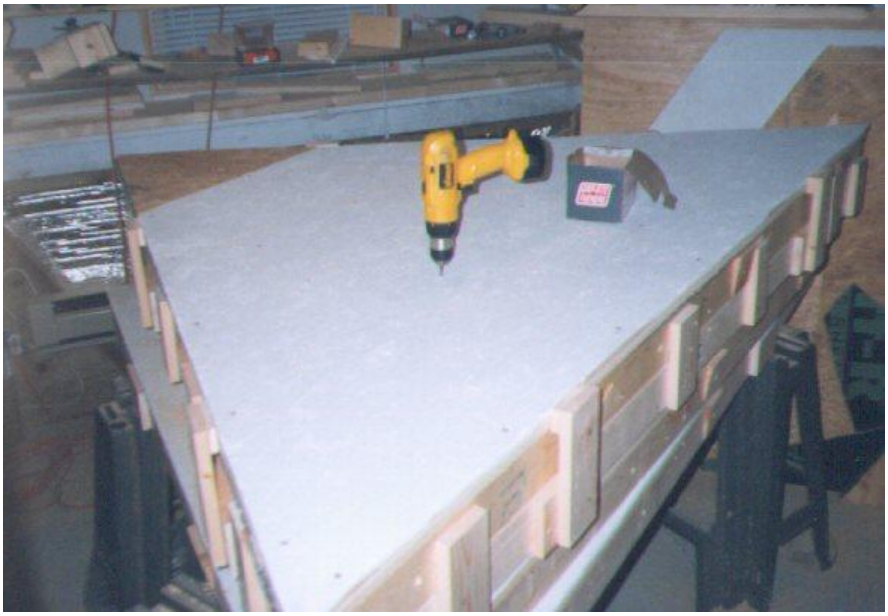

The multiple layers of OSB sheathing are predrilled using a pattern which has itself been accurately predrilled at the proper locations for connecting to the 2x4 panels.

The wedge connectors are cut from a 4x4 using a miter saw setting of ½ of the wedge angle. This photo shows the stop block clamped at the position in which to set a 4x4 against for cutting. The 4x4 lumber used for wedge material is reversed for every cut. The stop block is set to provide accurate easy repetitive cuts.

The connecting wedges are drilled 1 ¾” from the top and 1 ¾” from the side. They are drilled with a 7/16” bit, using a base wedge as a platform for holding the full principle wedge. This base wedge, which has an angel of ½ of the principle wedge, allows the hole to be drilled parallel with the top wide edge of the principle wedge connector.

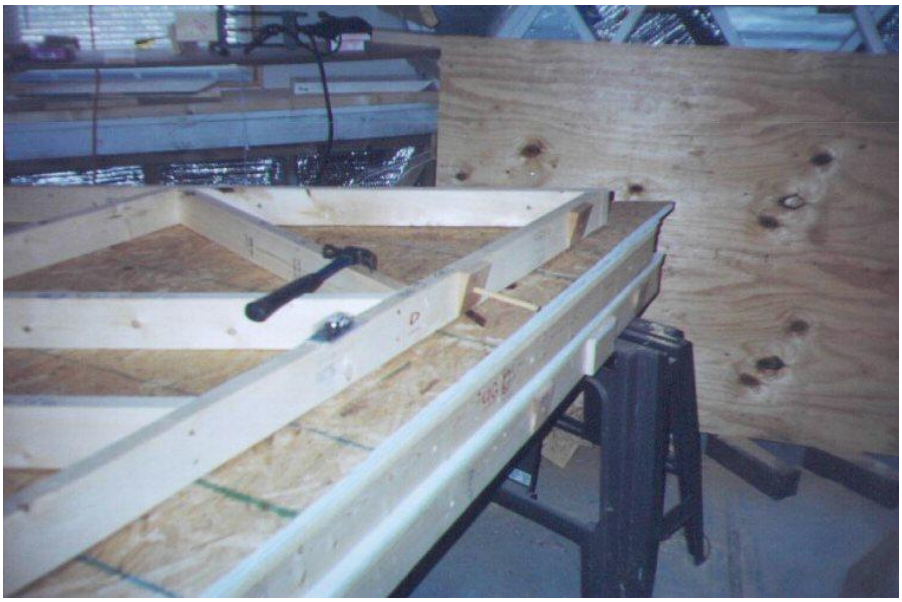

Attach the appropriate wedge to the appropriate side board using a 7/16” dowel as a guide, and number 17 nails which are 1 ¼” long. A better option is to wait until the insulation, sheathing, and roofing are reapplied to the panel and then connect them to the right side of the panel edge boards

The overlapping distance of the insulation is pushed up to the edge of the 2x4 panel in order to facilitate a ballooning of the insulation into the panel cavities. A stapler is used to hold the Reflectix insulation in place.

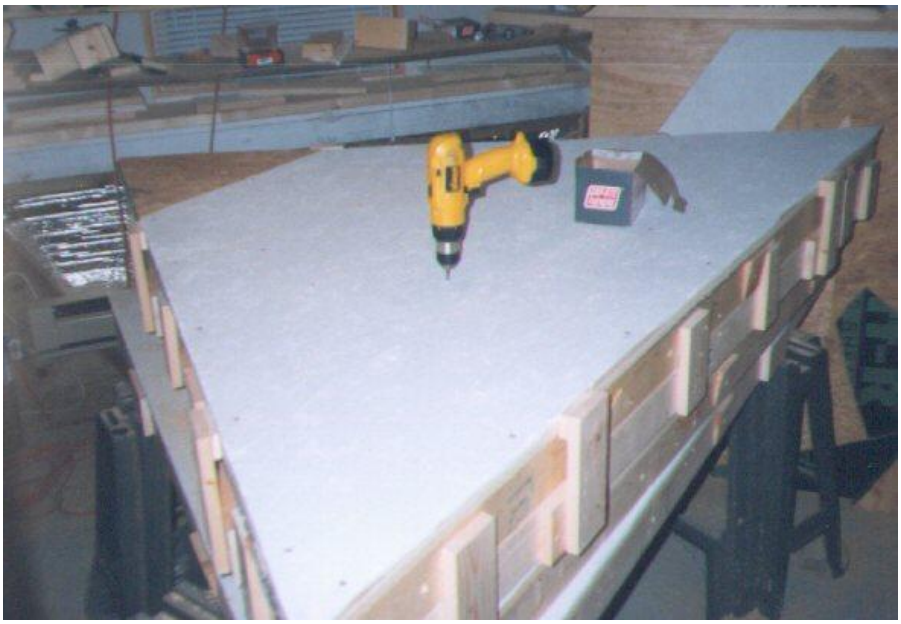

The OSB sheathing, with underlying Cellutex board and Reflectix sheet insulation, using positioning cleats to obtain the correct position, is screwed down using 2 ½" deck screws. The clutched powered driver of the drill has the clutch set so as not to over compress the underlying insulation. The predrilled holes are counter sunk to allow the screw heads to be flush.

The Peel & Seal roofing is cut using the OSB sheathing as a template. The Peel & Seal is over cut 3 ½" on the edges, so as to overlap the sides and over cut 3" in the middle to facilitate the manufacturers recommended 3" lapping. A seam roller is used to smooth the roofing in the center and provide a tight joint. After the panels are assembled, a 6" wide strip will cover the gaps. A drawing is provided in the plans for how the Peel & Seal is to be applied to each panel.

To meet manufacturers guidelines in applying Peel & Seal, the roofing must be applied after the panels are assembled into a full dome, and in an overhanging fashion.

Alternate Weather Protection

Tryvek house wrap can be used for intermediate protection of the prefinished panels. It can stand up to the weather for as long as 6 months without allowing the sheathing-insulation interface to become wet. After the panels are assembled, the seams can be taped with Tryvek tape or sealed with caulk, to allow a dry working space within the building.

If Peel & Seal roofing is to be used as the roofing material, then the Tryvek must be cut off exposing the smooth side of the OSB sheathing.

If conventional 3 tab roofing is to used, the Tryvek is simply left in place. Make sure the nails do not penetrate the under lying thermal break material and its vapor barrier.

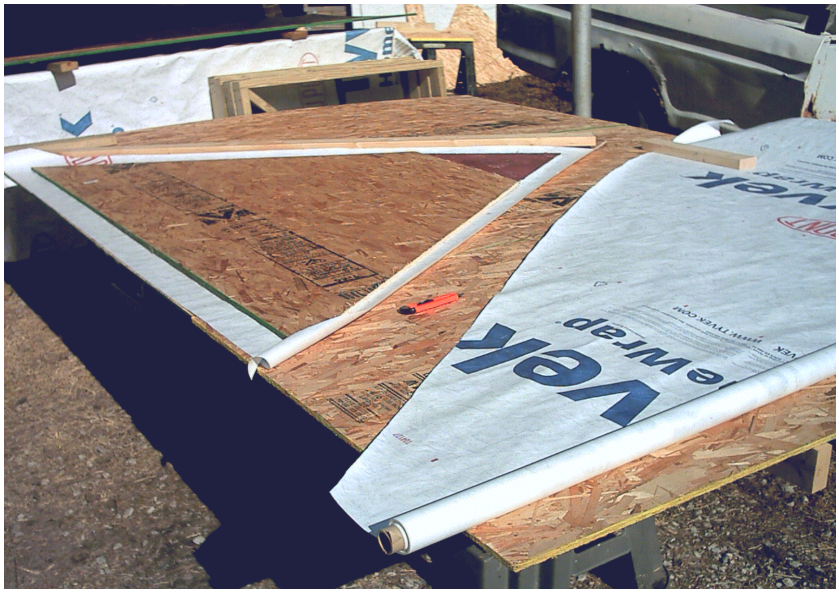

Cut the Tryvek using the sheathing as a pattern, together with a 2x4 edger as a cutting guide. Use a long bladed utility knife to cut the Tryvek.

Attach the Tryvek house wrap to the panel with ¼” staples. Cut out the Tryvek around connecting holes using a utility knife. Attach wedge connectors over the Tryvek using 1 ¼” x no. 17 wire nails.

The “type I” erection process starts by staking out the base support. Unlike what is shown, the overall process would be simpler if the site was leveled, drained and graveled before the staking out process was begun.

Next the pier holes are dug with slightly flared bottoms and the post are set and cut at the appropriate elevation and position.

Next the base support beams are drilled, counter sunk and anchored in the proper position. Then the first level base panels are tacked into place and the connecting first level panels are bolted between these. The use of a bubbled level-protractor is very convenient for getting the proper lean angle for the base panel which is approximately 10 degrees. The first level panels can be staged off a level hinged ladder as shown.

The following photo shows the two tier temporary scaffolding system used I assembling the 24’ dome structure. This allows the panels to be raised 4’ at a time before being fitted into place. The scaffolding is built around 5 temporary 4”x 4”x 12’ post rising directly below the 5 corners of the top pentagon.

The second level panels are lifted in stages up to the upper scaffolding and then braced and bolted in place.

The third level panels are staged to the upper scaffolding and then lifted to the third level and balanced across the top of the second tier panels and a ladder spanned across the third tier opening. The third tier panel is then braced with a 2x4 and then bolted into place.

The electrical wires are pulled through the knee wall framing before the knee wall sheathing is applied. The window and door panels are supported by a ledger board at the bottom and tied to the geodesic frame by a tie board.

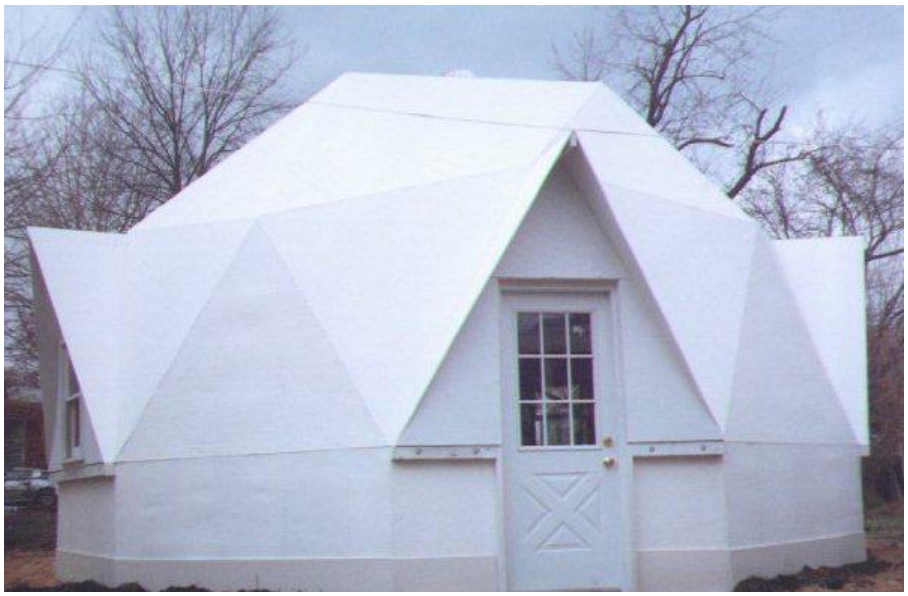

The exterior insulation is placed against the outside of the knee wall and above the perimeter drain. Earth is placed against the exterior insulation. The top seam of the insulation is caulked to the knee wall. To weather proof the dome you must caulk the seams. It may take two applications. I recommend a GE paintable silicone caulk in cases where the dome will have a painted elastomeric coating, and a plane silicone caulk for Peel & Seal roofed panels.

The maintenance for a paintable roof is high and is only recommended for short term, until funds can be made available to properly roof the dome.

Note: Connections are made using a minimum of two 3" deck coated deck screws per connection.

Note: Truss is constructed of 2 X 4's set on edge.

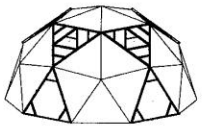

40 Panel
1/2 Geodesic

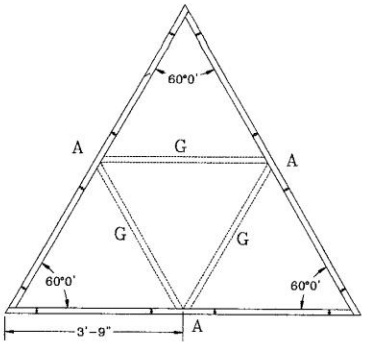

Layout Chart

24' Mountain Truss
Equal lateral Panel
(10 Panels)

24e2a.gif
24dom-e1.dwg.
drawn 10/22/97 rlc
drawn 12/24/03 rlc

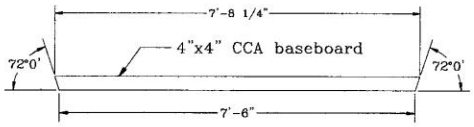

10 lengths

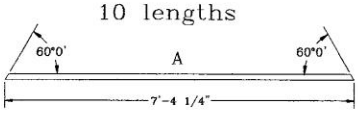

30 lengths

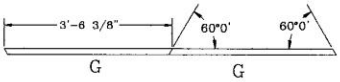

8-15 lengths

Note: 60* cut is achieved on a standard miter saw with a setting of 30*.

Note: 48 lengths of 8' 2x4s are required for 10 equal lateral panels.

Cutting Chart

24' Mountain Truss
Equal lateral Panel
(Type II)
(10 Panels)

Note: Truss panels are constructed using 2 x 4's on edge.

24e1a.gif
24domt3b.dwg
drawn 11/1/97 rlc
revised 12/24/03 rlc

Note: Connections are made using a minimum of two 3" deck coated deck screws per connection.

Note: Truss is constructed of 2 X 4's set on edge.

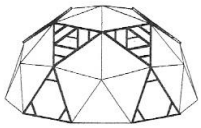

40 Panel
1/2 Geodesic

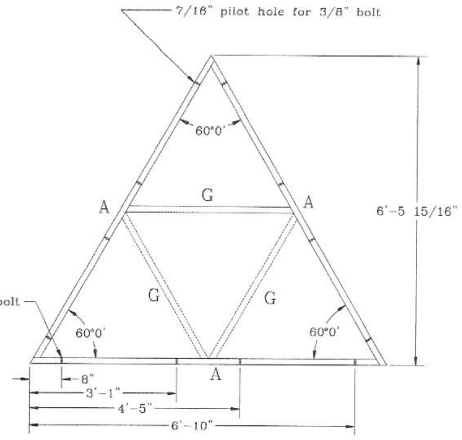

Connection Chart

24' Mountain Truss
Equal lateral Panel
(Type II)
(10 Panels)

24e2b.gif
24dom-t3.dwg.
24-b-e1.gif
drawn 10/22/97 rlc
revised 12/24/03 rlc

Note: Connections are made using a minimum of two 3" deck coated deck screws per connection.

Note: If thermal break insulation is not used, then the overhang of the sheathing must be reduced 1/8" on all overhanging edges.

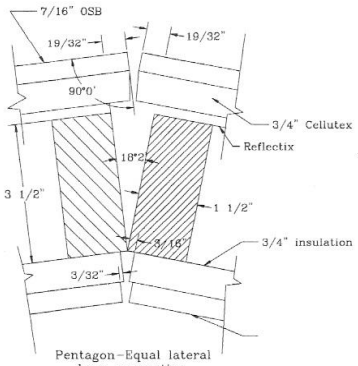

Pentagon-Equal lateral base connection

Cross Section of Panel Joint

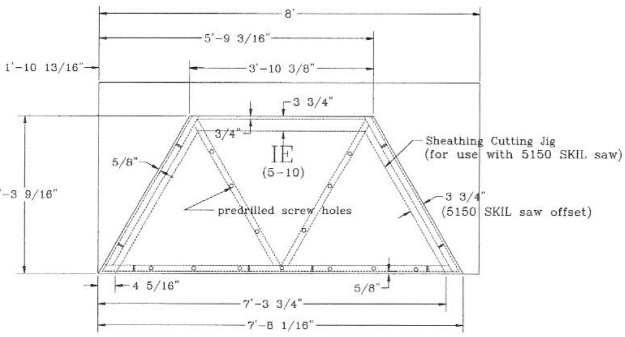

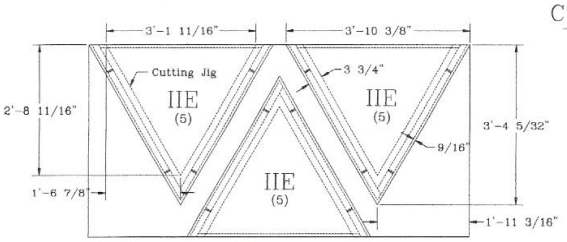

Cut-out Pattern for Sheathing

24' Mountain Truss
Equal lateral Panel
(Type II)
(thermal break)

24e2a.gif
24domt3b.dwg
drawn 20/22/97 rlc
revised 12/24/03 rlc

Note: This jig is to be used with a 7 1/4" SKIL saw type 5150 which has a base plate offset of 3 3/4" from edge to side of blade when using a 40 tooth carbide blade.

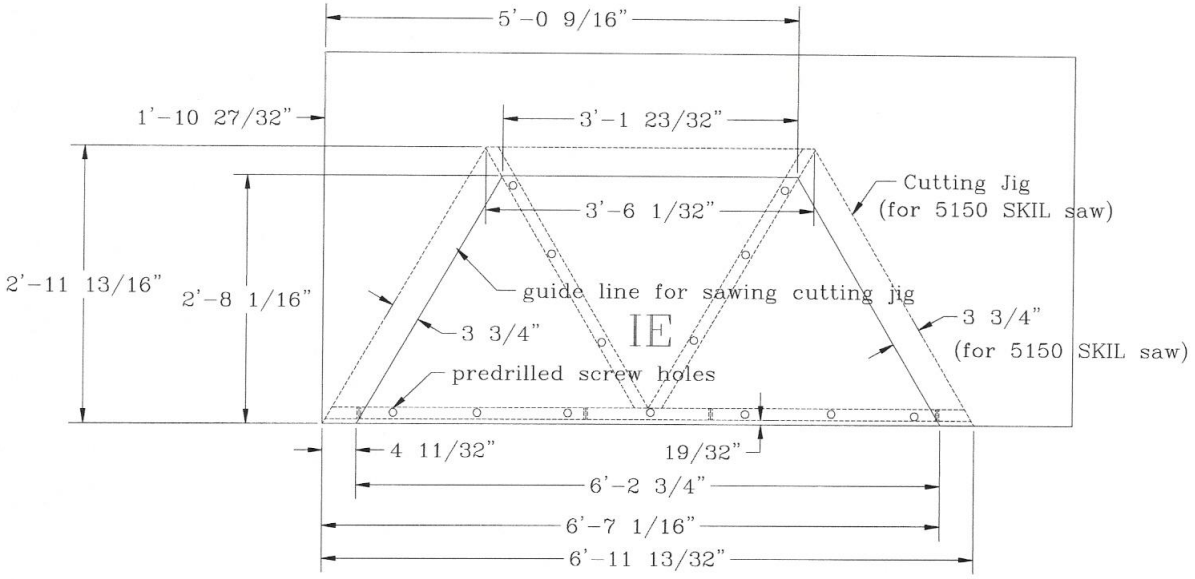

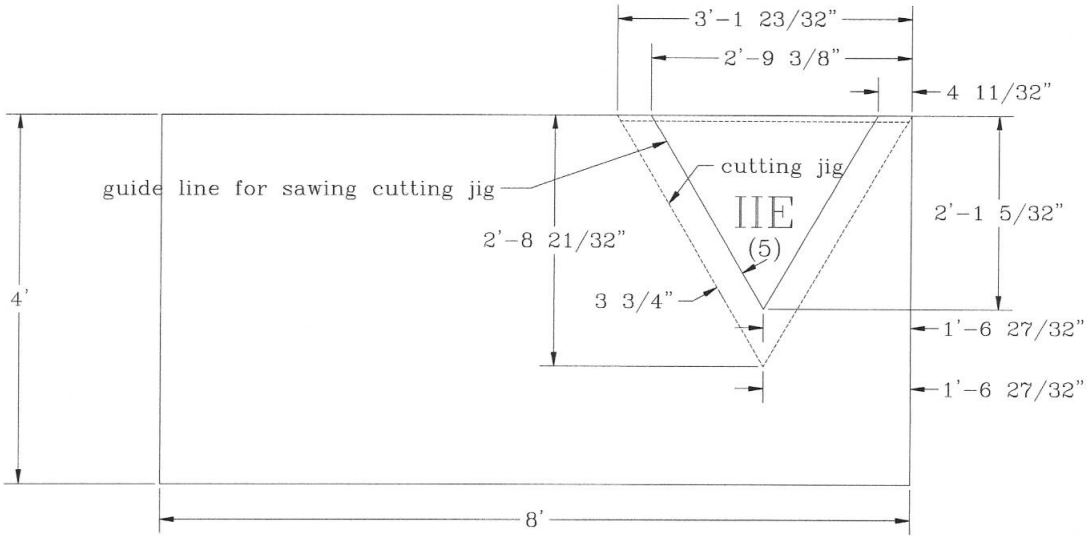

Sheathing Cutting Jigs

24' Mountain Truss
Equal lateral panel
(Type II)
(for use with thermal break insulation)

24domt3b.dwg.
drawn 10/22/97 rlc
revised 5/9/01 rlc

Note: Connections are made using a minimum of two 3" deck coated deck screws per connection.

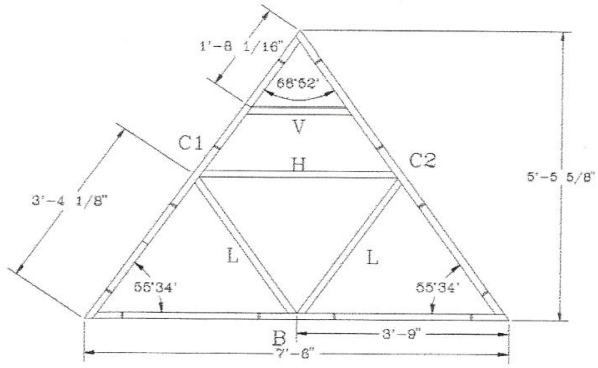

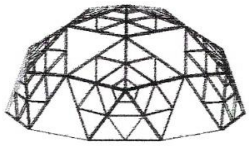

Note: Truss is constructed of 2 X 4's set on edge.

40 Panel
1/2 Geodesic

Layout Chart

24' Mountain Truss
Pentagon Panel
(Type II)
(30 Panels)

24p1b.gif
24dom-e1.dwg.
drawn 10/22/97 rlc
revised 12/24/03 rlc

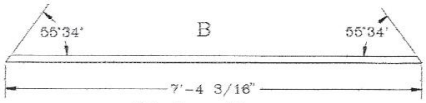

30 lengths

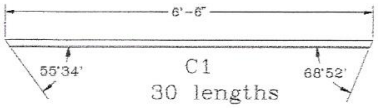

30 lengths

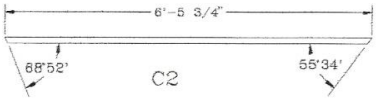

30 lengths

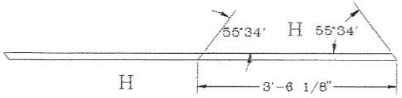

15 lengths

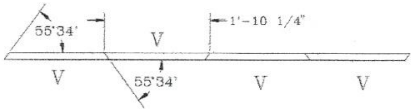

8 lengths

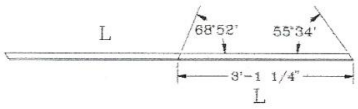

30 lengths

Note: 143 lengths of 8' 2x4s are required for 30 pentagon panels.

Note: A setting of 34*26' is required for a 55*34' simple miter.
A setting of 21*8' is required for a 68*52' simple miter.

Note: Truss panels are constructed using 2 x 4's on edge.

Cutting Chart

Pentagon Panels
24' Mountain Truss
(Type II)
(30 Panels)

24p1a.gif
drawn 10/22/97 rlc
drawn 5/1/01 rlc
drawn 12/24/03 rlc

Note: Connections are made using a minimum of two 8" deck coated deck screws per connection.

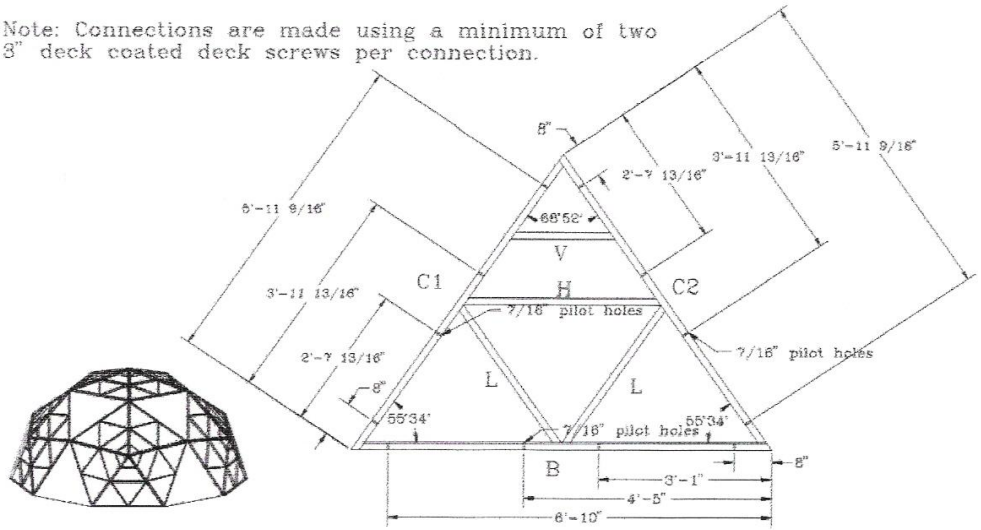

40 Panel
1/2 Geodesic

Note: Truss is constructed of 2"x4"s set on edge.

Connection Chart

24' Mountain Truss
Pentagon Panel
(Type II)
(30 Panels)

24p2a.gif
24dom-t3.dwg.
drawn 10/22/97 rlc
revised 12/24/03 rlc

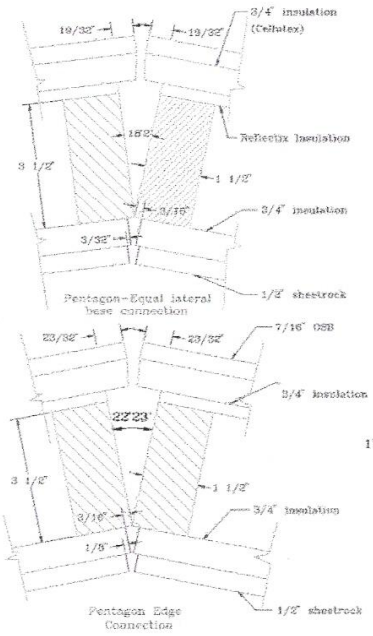

Cross Section Panel Joint
Sheathing Edge Detail

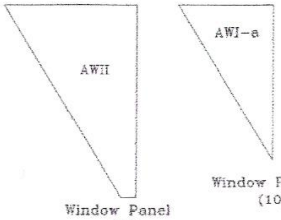

Window Panel (10)

Window Panel (10)

Note: If thermal break insulation is not used, then the overhang of the sheathing must be reduced 1/8" on all overhanging edges.

Note: Sheathing is OSB which is 3' 11 7/8" to 4' wide.

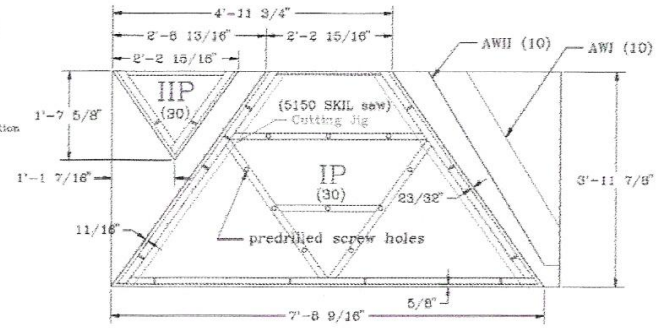

Cut-out Pattern for Sheathing

24' Mountain Truss
Pentagon Panel
(Type II)

24p2b.gif
24domt3b.dwg
drawn 10/22/97 rlc
revised 10/26/97 rlc
revised 12/24/03 rlc

Note: This jig is to be used with a 7 1/4" SKIL saw type 5150 which has a base plate offset of 3 3/4" from edge to side of blade when using a 40 tooth carbide blade.

Note: Sheathing is OSB which is 3' 11 7/8" to 4' wide and 7' 11 7/8" to 8' long.

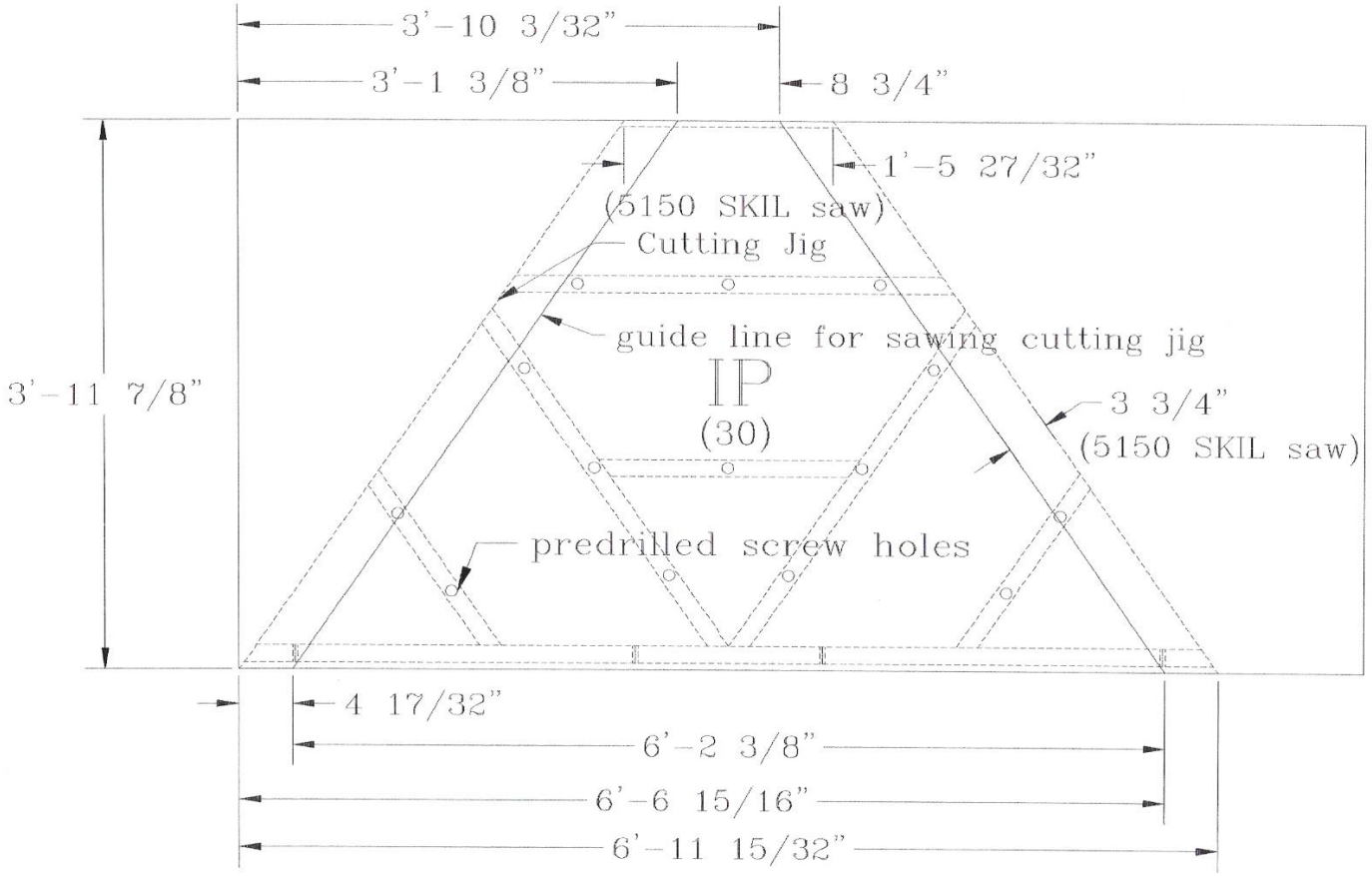

Sheathing Cutting Jig

24' Mountain Truss
Pentagon Panel
(Type II)
(for use with thermal break insulation)

24domt3b.dwg.
drawn 10/22/97 rlc
revised 5/9/01 rlc

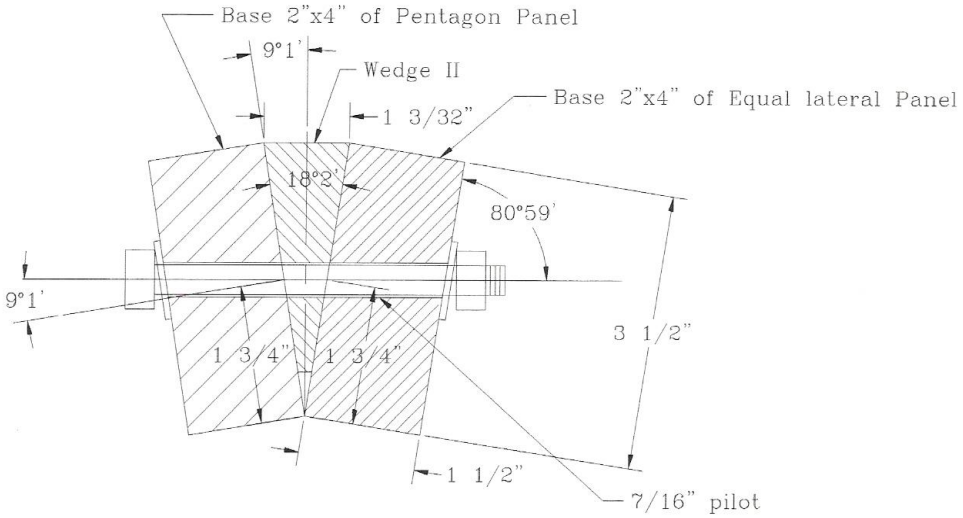

Equallateral Panel–Pentagon Panel Connection

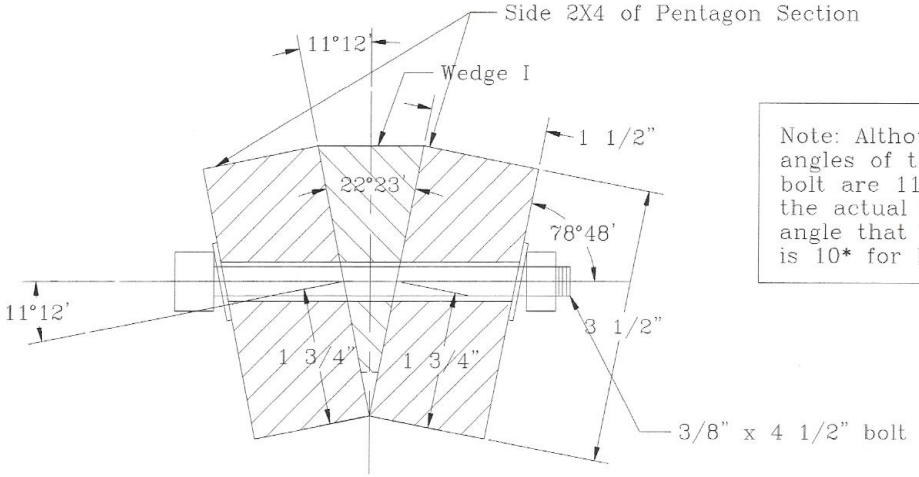

Note: Although the offset angles of the connecting bolt are 11*12' and 9* 1', the actual fabrication angle that will be used is 10* for both connections.

Pentagon Edge Connection

Type I Connectors

(revised fabrication procedure)

Tri–P–Ge.dwg
8/20/02 rlc
revised 8/29/02 rlc

Note: Door is a stardard 32" door.

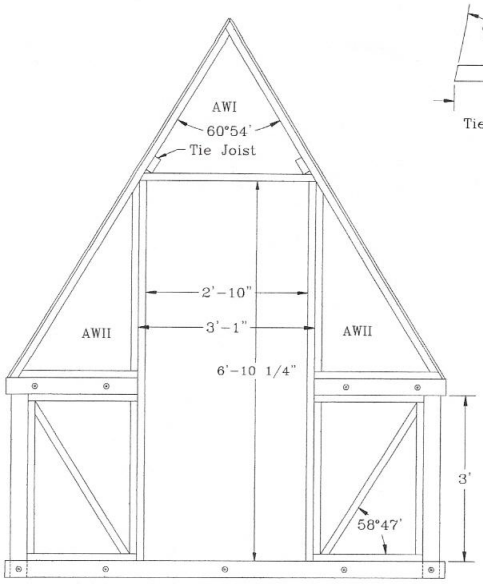

Doorway

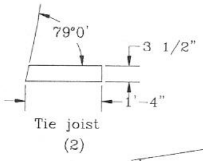

Tie joist
(2)

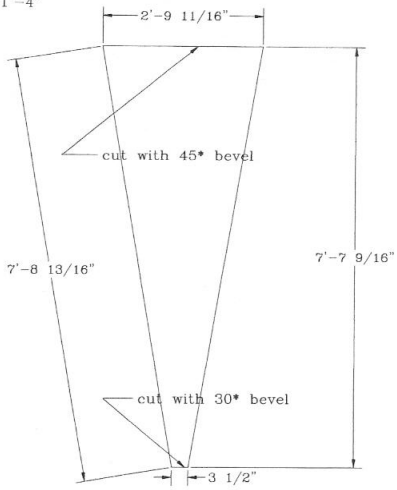

Awning
(2)

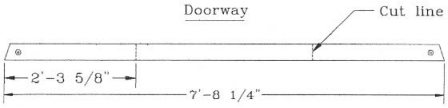

Top View of 4x4 Baseboard Support

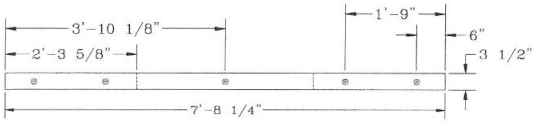

Side View of Ledge Support

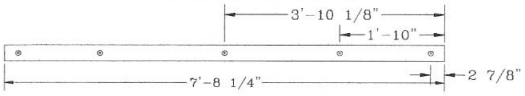

Bottom door support ledger

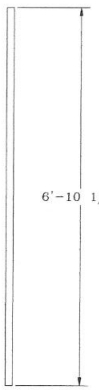

2x8 door post
(2)

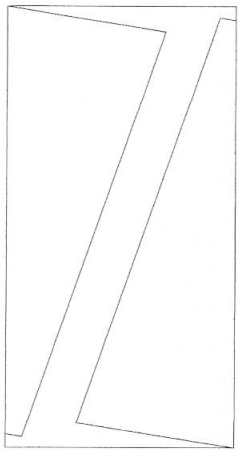

Awning
Cut-out pattern

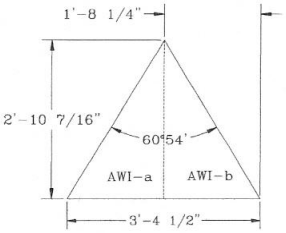

(1)
Window Panel
Plywood Sheathing

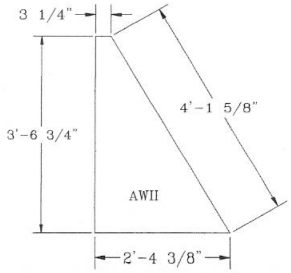

(2)
Window Panel
Plywood Sheathing

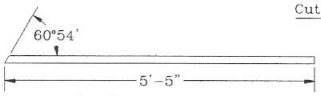

2"x 2" awning tack board
(2)

24door.gif
24domt3b.dwg
24dom-e1.dwg.
10/22/97 rlc
revised 11/9/97 rlc
revised 12/25/03 rlc

Awning & Ledge Support

Note: Window is a stardard
36"x41" casement type.

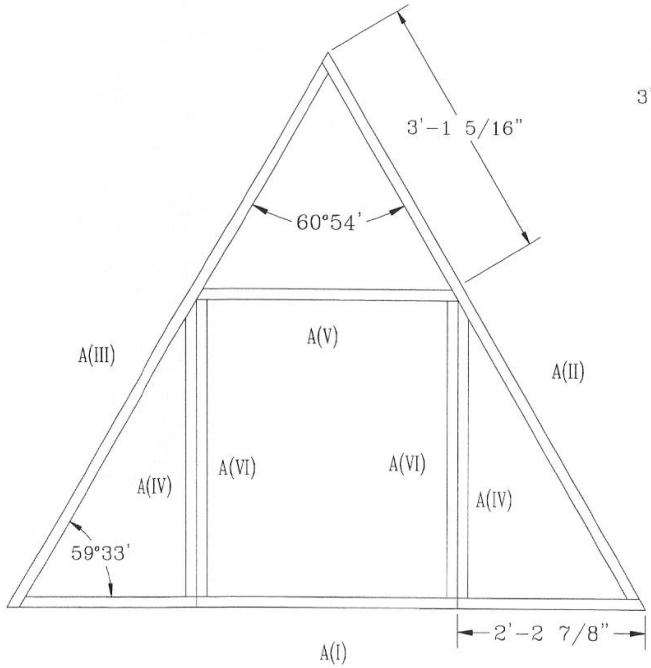

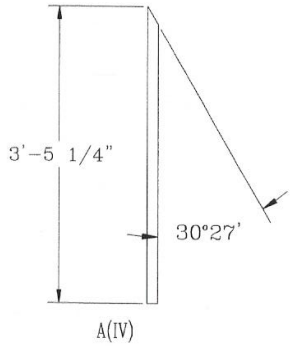

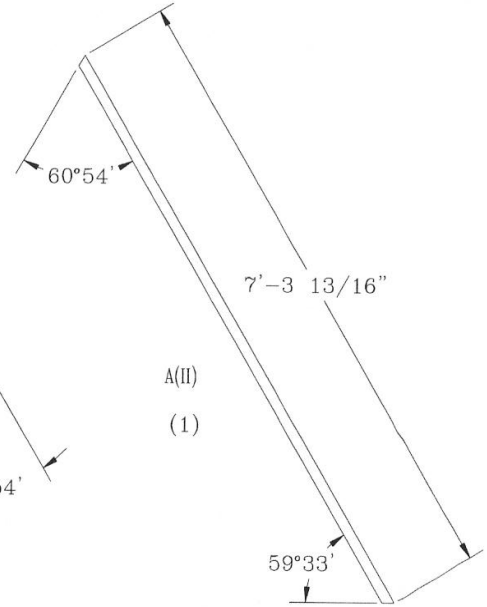

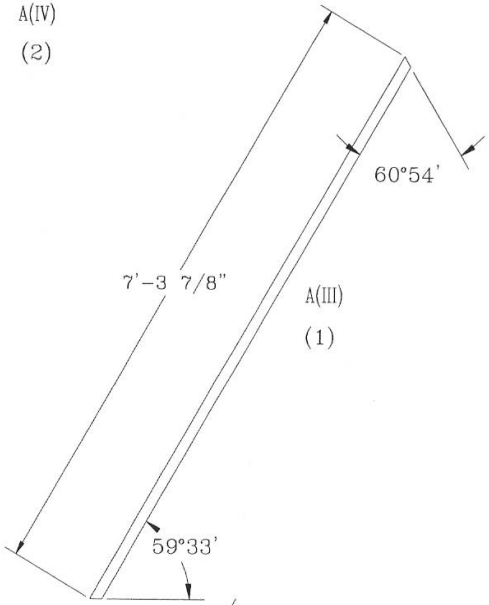

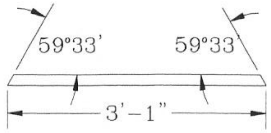

A(V)
(1)

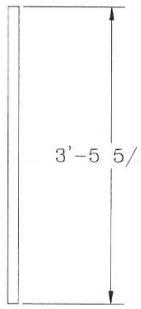

A(VI)
(2)

Window filler
(2)

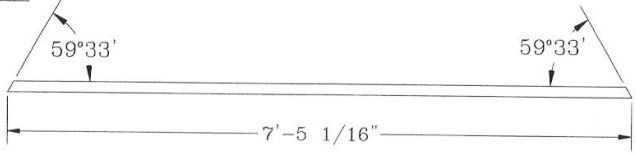

A(I)
(1)

Awning Support

24awn.gif
24domt3b.dwg.
9/21/97 rlc
revised 12/25/03 rlc

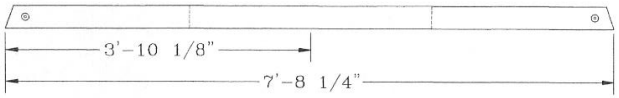

Top View 4x4 Baseboard Support

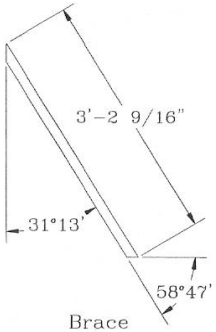

Brace
(2)

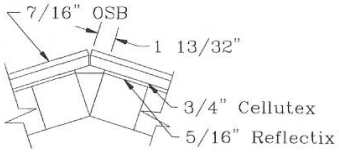

Top View Kneewall Joint
(scale 2:1)

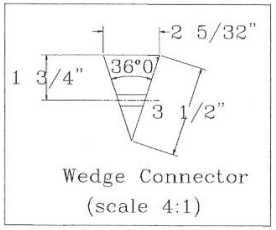

Wedge Connector
(scale 4:1)

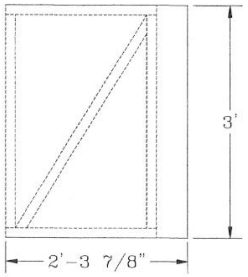

Door Sheathing for kneewall

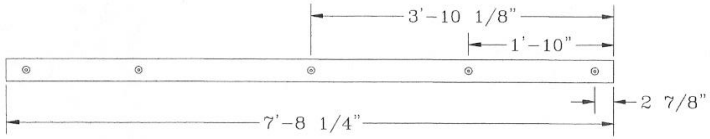

Front bottom door support ledger

(1)

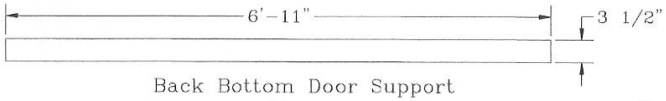

Back Bottom Door Support
(1)

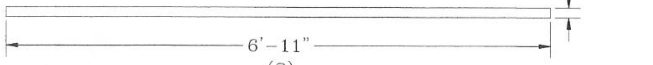

(2)

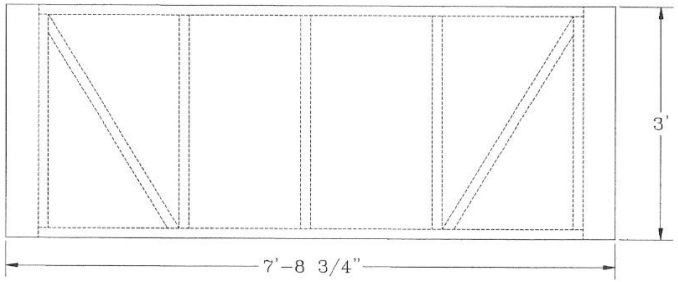

Window Sheathing

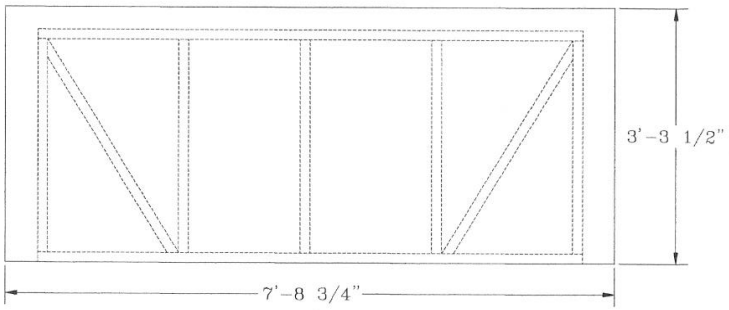

Full Wall Sheathing

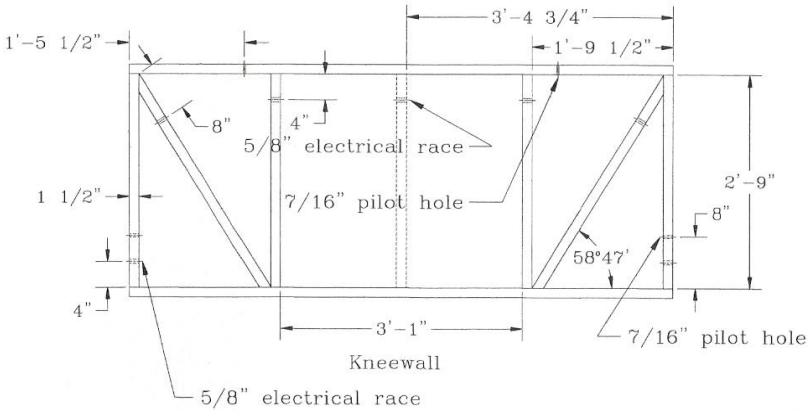

Kneewall

24knw1.gif
24domt3b.dwg
10/15/97 rlc
revised 12/25/03 rlc

Kneewall

(Type II with exterior thermal break insulation)

Note: A framed kneewall anchored to a concrete pier can be substituted for the post and beam kneewall support.

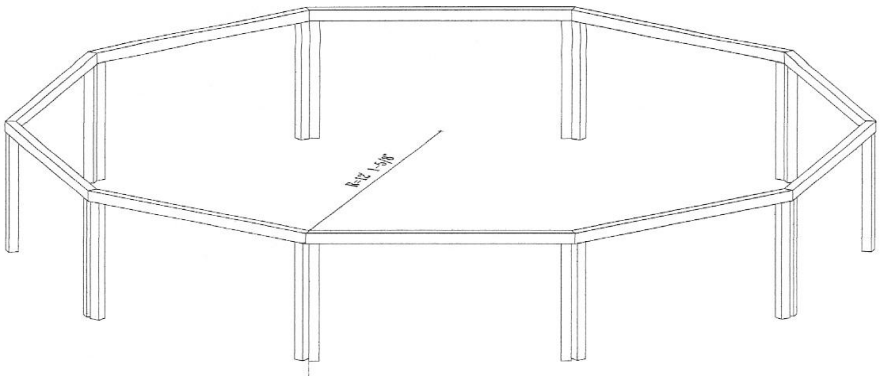

Half Scale Perspective

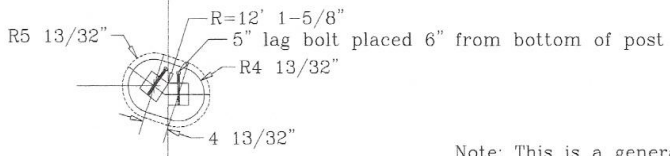

Plan View for Flared Pier Holes

Note: This is a general plan and will not be appropriate in all cases.

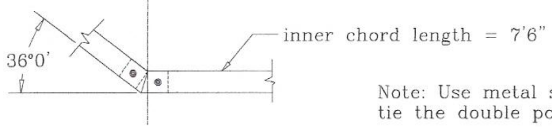

Note: Use metal strapping to tie the double post together.

Top View of Base Beam Support

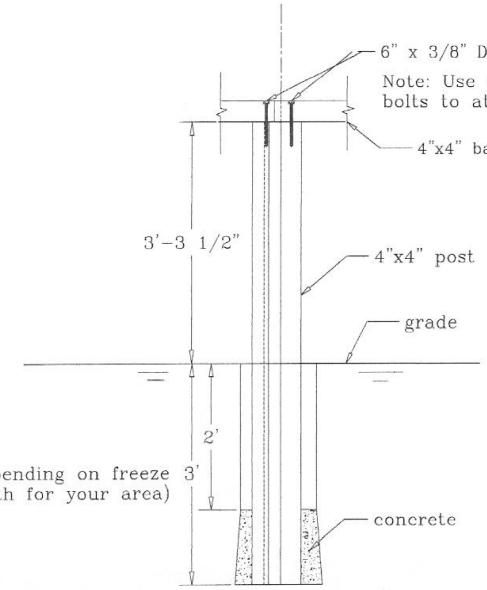

Note: Concrete is only placed to the 1' mark until truss is completely assembled. This allows for some movement in case pier isn't exactly in its proper position. After the truss is assembled then the hole can be filled with concrete to finish grade.

Note: I prefer to use a dry concrete gravel mix for the bottom 1'.

Side View Flared Pier

24knwp.gif
24domt3b.dwg
10/13/97 ric
revised 1/14/02 ric

Kneewall Support

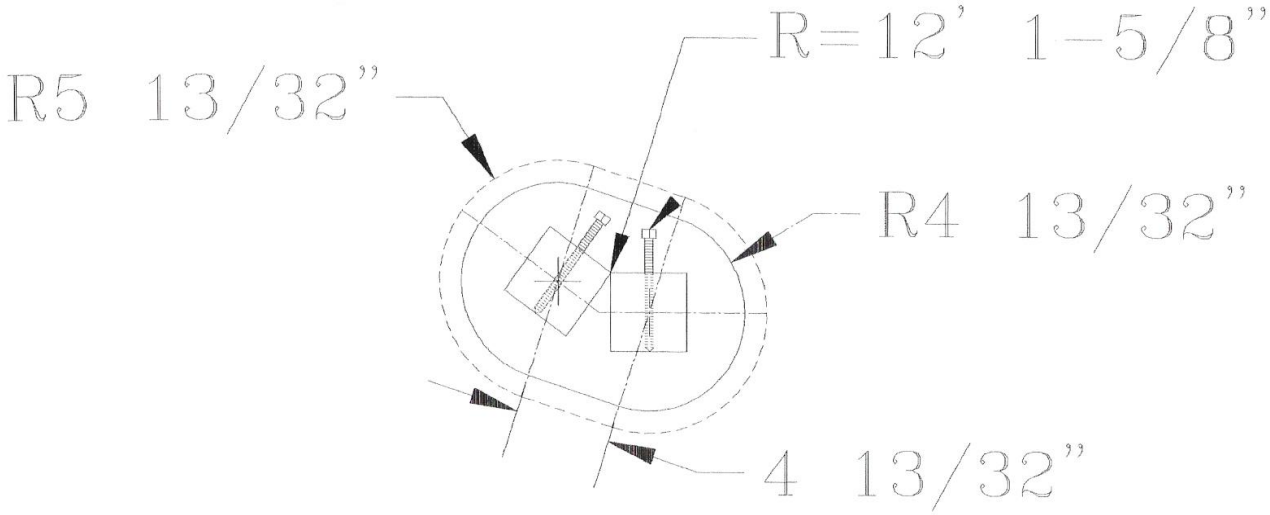

plan view

24domt3b.dwg
10/13/97 rlc
revised 1/14/02 rlc

Flared pier support

Hole Template

Note: If the thermal break insulation is not available, then the overhang must be reduced 1/8" on all overhanging edges.

Note: The R-factors were determined by using Solar Shield bubble pack and Cellotex super Tuff-R.

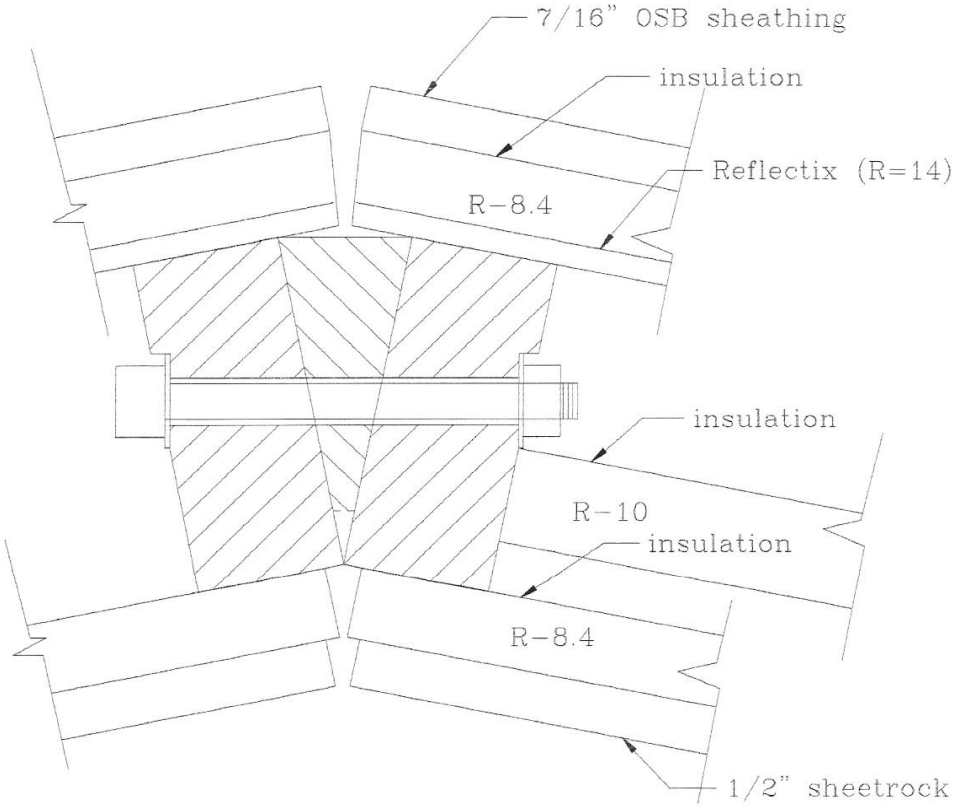

Pentagon Edge Connectiion

R-40.8

Option for insulating

Note: Any variation or combination of the following types of insulation can be used.

24domt3b.dwg
tri-p-ge.dwg
insulat2.gif
9/27/99 rlc
revised 1/14/02 rlc

24' Mountain Truss
Material List

Location	Description	Cost/Item*	Quantity	Cost
Main Truss				
	2"x4"x8'	2.19	211	462.09
	3/8" Dia. x 4 1/2" bolts	.32	220	70.40
	3/8" Dia. nuts	.10	220	22.00
	3/8" Dia. washers	8.00/box	500/box	8.00
	3/8" Dia. lock washers	.10	220	22.00
	3" deck screws	$15.00/5 # box	3 boxes	45.00
	3/8" Dia. x 4" lag bolt	1.25	40	50.00
	plate connectors	.30	30	9.00
			sub total	688.49
Main Truss Sheathing				
	1/2" x 4' x 8' ext. plywood	9.50	42 sheets	380.00
	2 ½" deck screws	$15.00/5# box	4 boxes	60.00
			sub total	459.00
Support Kneewall				
	2"x4"x8CCA (panel)	2.29	40	91.60
	4"x4"x12 CCA (post)	10.69	10	106.90
	4"x4"x8' cedar (top base)	8.41	10	84.10
	4"x4"x8' CCA (low base)	4.71	10	47.10
	3/8" lag bolts x 4" (panel tie)	1.10	40	44.00
	3/8" lag bolts x 7" (post tie)	1.30	20	26.00
	3/8" washers	.05	60	3.00
	4' x 8' x 1/2"plywood CCA	15.00	10 sheets	150.00
	plate connectors	.30	30	9.00
			sub total	561.70

Notes:

1. CCA is only required in designs where there is earth contact or in the base support beam which is in contact with the concrete

*1997 prices

matlt24a.wps, 11/1/97 rlc

Updated 12/31/03 rlc

24' Mountain Truss
Material List

Location	Description	Cost/Item*	Quantity	Cost
Awnings				
	2"x4"x8'	2.00	30	60.00
	2"x2"x8'	1.29	10	12.90
	1/2" x 4' x 8' ext. plywood	9.50	5 sheets	47.50
	latex paint	18.00/gallon	1 gallons	18.00
	latex primer	18.00/gallon	1 gallon	18.00
	latex caulk	2.00/tube	10 tubes	20.00
	2 1/2" deck screws	4.00/1b	5 lbs	20.00
	4"x4" cedar beam support	8.41	4	72.00
			sub total	234.74
Roofing				
	Peal & Seal Roofing	69.00/square	14 square	966.00
	Peal & Seal Roofing (6" strips)	69.00/square	1 square	72.00
	drip edge	3.00/length	10 lengths	30.00
	1/2" metal screws	.10/each	60 screws	6.00
			sub total	1074.00
Windows and Doors				
	32" exterior door	150.00	1	150.00
	34"x41" windows	120.00/each	4	480.00
	2"x 8" x 8'	6.00/3ach	2	12.00
	2" x 8" x 12'	9.00/each	1	9.00
	4"x 4" CCA beam support	6.00/each	1	6.00
			sub total	657.00
			Total	3853.98

Notes:

1. CCA is only required in designs where there is earth contact or in the base support beam which is in contact with the concrete

*1997 prices

mat24b3.wps, 10/14/97 rlc

revised 3/23/03 rlc

24' Mountain Truss
Material List

Location	Description	Cost/Item*	Quantity	Cost
Concrete Floor				
	1/2" Gravel		12 tons	
	4000 psi concrete		6 C. Y	
	3" perforated drain pipe		100 ft	
	3" solid plastic drain pipe		200 ft	
	6 mil vapor barrier		600 s.f.	
	4' x 8' sheets of 1 1/2 " EPS		20 sheets	
	1/2" PEX tubing		500 ft	
	1/2" rebar (20' lengths)		30 lengths	
Roof Accessories				
	6" triple wall stove pipe		4 ft	
	6" stove pipe		16 ft	
	6" stove pipe elbow		3	
	Stove cap		1	
	stove pipe roof flashing		1	
	stove pipe brace		1	
Insulation (dome)				
	Reflectix	0.40/s.f.	1300 s.f.	520.00
	3/4" Tuff-R Cellutex	10.00/sheet	50 sheets	500.00
	Astor-Foil (2" alum tape)	7.00/roll	5 rolls	35.00
Insulation (floor)				
	2" EPS		25 sheets	
Wedge Connectors (type II)				
	4" x 4" x 8' cedar	8.00/each	3 lengths	24.00
	18 x 1 1/4" wire nails	3.00/box	3 boxes	9.00

matlt24c.wps, 7/12/99 rlc
revised 1/15/02 rlc

24' Mountain Truss
Material List

Location	Description	Cost/Item*	Quantity	Cost
Electrical				
	100 amp breaker box		1	
	wire 12-2 w/ground		300'	
	wire 12-3 w/ground		200'	
	plastic electrical boxes		30	
	15 amp outlets		30	
	light switches		10	
	electrical staples		50	
Plumbing				
	1/2" copper pipe		70'	
	1/2" elbows		10	
	1/2" tees		14	
	1/2" caps		4	
	1/2" shut-off valve		2	
	1/2" hose valve		2	
	1/2" -3/8" supply valve 90*		5	
	1/2" convert to ½" male threads		2	
	1/2" convert to ½" female threads		2	
	½" convert to ¾" female threads		4	
	1/2" 45* elbow		6	
Drains				
	3" PVC		40'	
	3" PVC elbows		3	
	3" PVC tees		3	
	3" PVC 45* elbows		2	
	3" to 2" reducer		2	
	2" PVC		20'	
	2" PVC elbows		3	
	2" PVC tees		3	
	1 1/2" PVC		10'	
	1 1/2"" PVC elbows		3	
	1 1/2" PVC tees		3	
	2" to 1 1/2" reducer		2	
	3" roof flashing		1	
	2" floor drain fitting		1	

matlt24d.wps, 7/14/99 rlc
Revised 3/12/03 rlc

Tool List for Geodesic Fabrication

Description	Quantity	Cost
10" power Miter Saw***	2 (minimum)	
Table saw **	1 (for second floor cutting only)	
Drill press	1	
Drill guides****	3 recommended (1 minimum)	
3/8" Power Drill	2	
Saw horses	7 minimum	
7/16" drill bit (brad point)	1 mimum 2 (suggested)	
1 1/8" Dia. paddle bit	1 (original process only)	
Compressor (1hp) *	1 (only required if nail gun is used)	
Nail gun *	1 (screws can be substituted for nails)	
Eye protectors	1	
Ear protectors	1	
Level	1	
Tape measure	1	
Adjustable square	1	
Square	1	
Mechanical Pencil	1	
Marking awl	1	
Skill saw (SKIL 5150)	1	
Saw guide	1	
hammer	1	
squeeze clamps	8	
tool pouch	1	
Pry bar	1	

Pier tools

post hole digger	1	
hoe	1	
shovel	2	
tamper	1	

* not absolutely necessary
** A 13 amp table saw will work, but I recommend a 15 amp saw.
*** preferably with a carbide blade
**** Tech Craft drill guides can be used with drill guide jigs

toolist.wps
2/18/02 rlc
revised 7/05/02 rlc

Note: Print on
card stock.
(3 sheets)

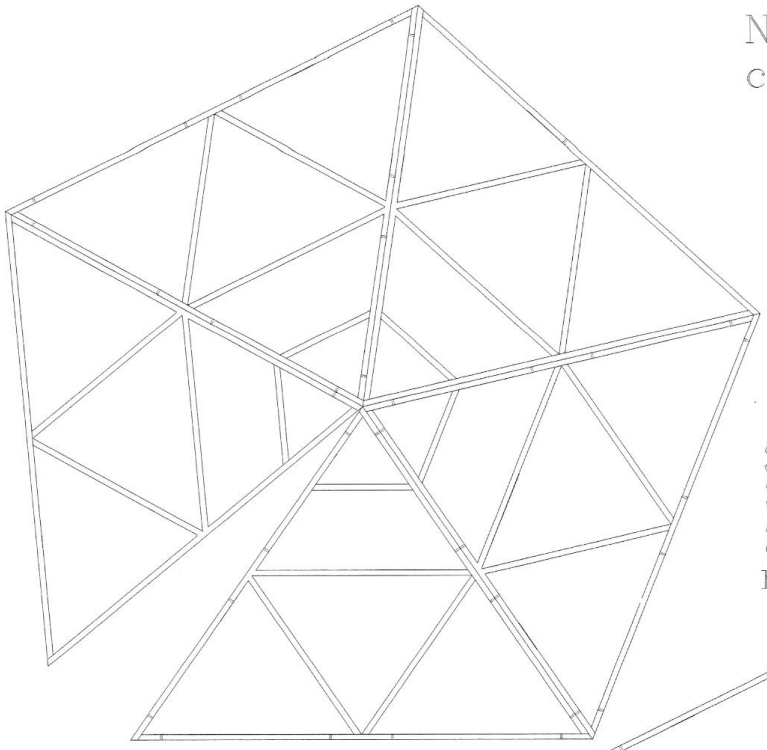

32f-bl.dwg
36cutout.dwg
2/17/00 rlc
revised 1/15/02

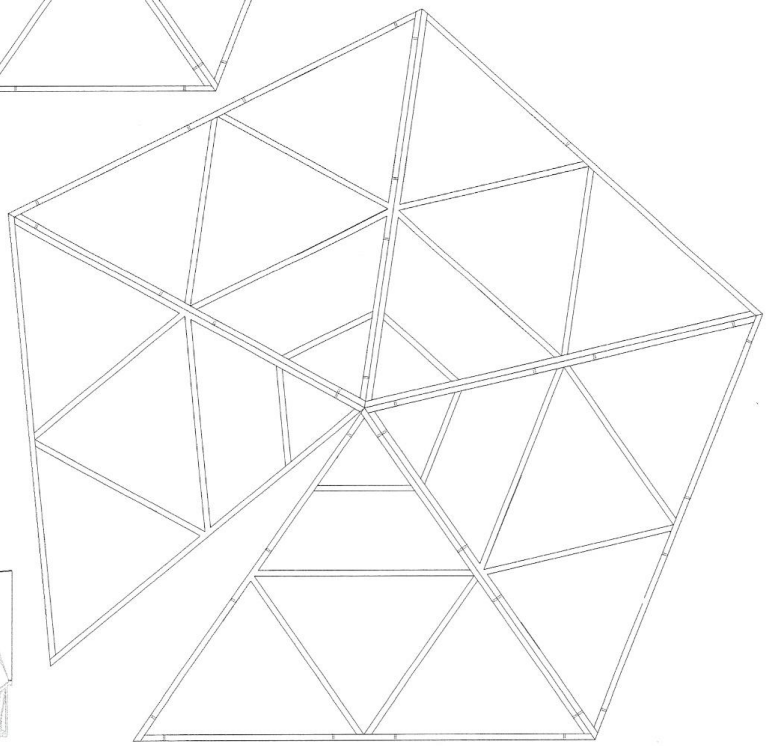

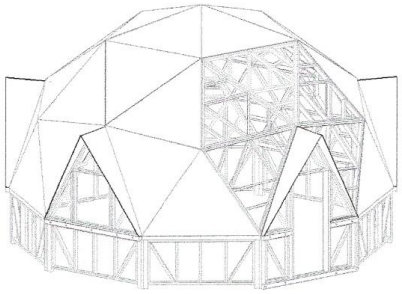

24' Diameter Dome
(paper model)

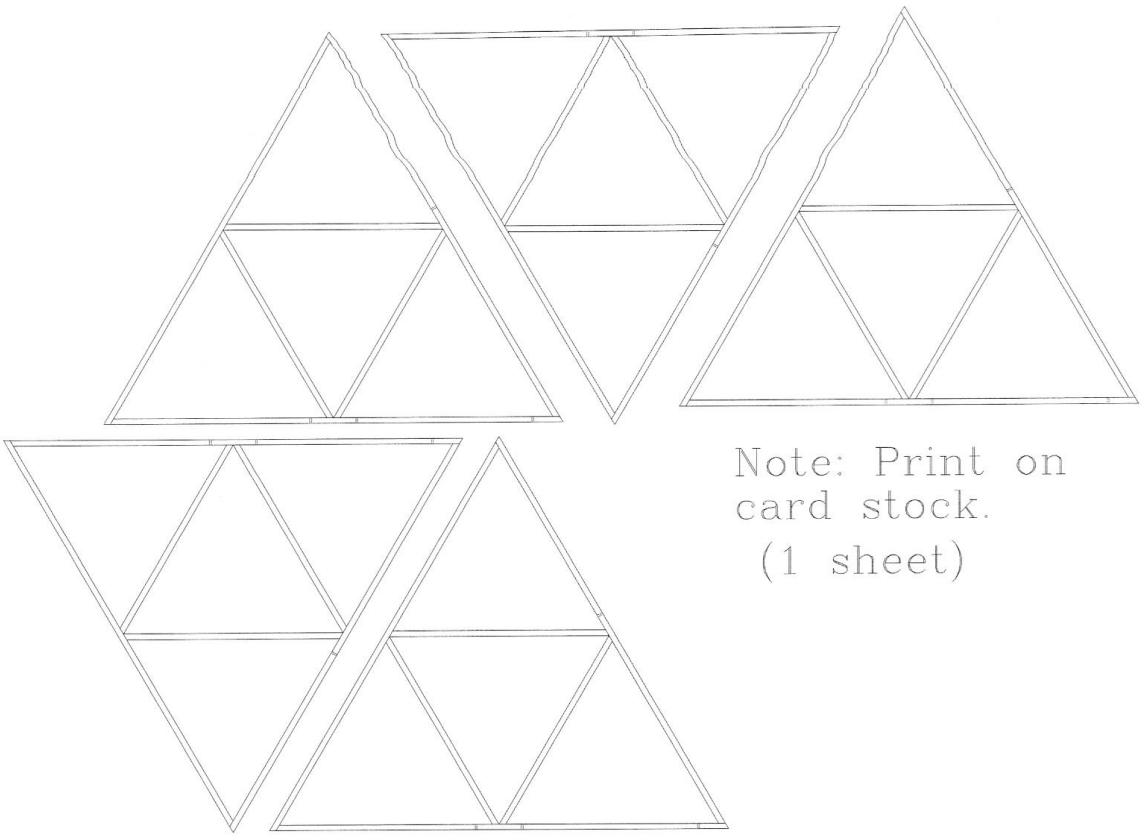

Note: Print on card stock.
(1 sheet)

32f-bl.dwg
1/21/02 rlc

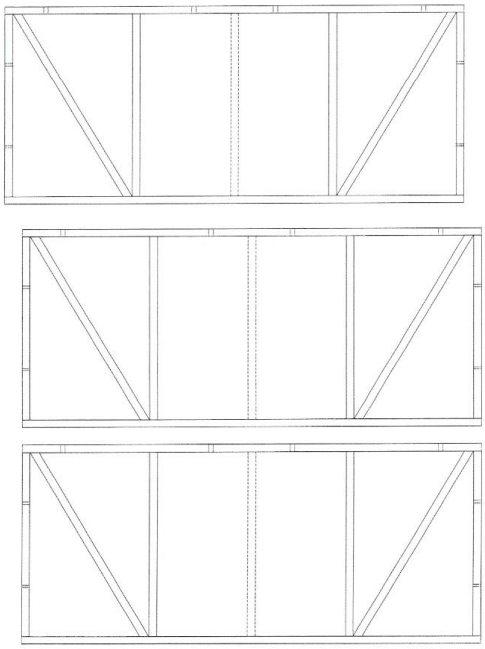

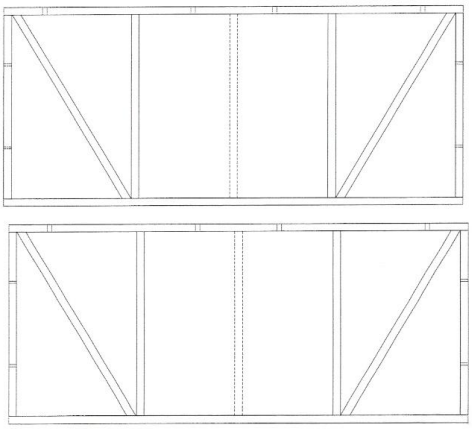

24' Diameter Dome
(paper model)

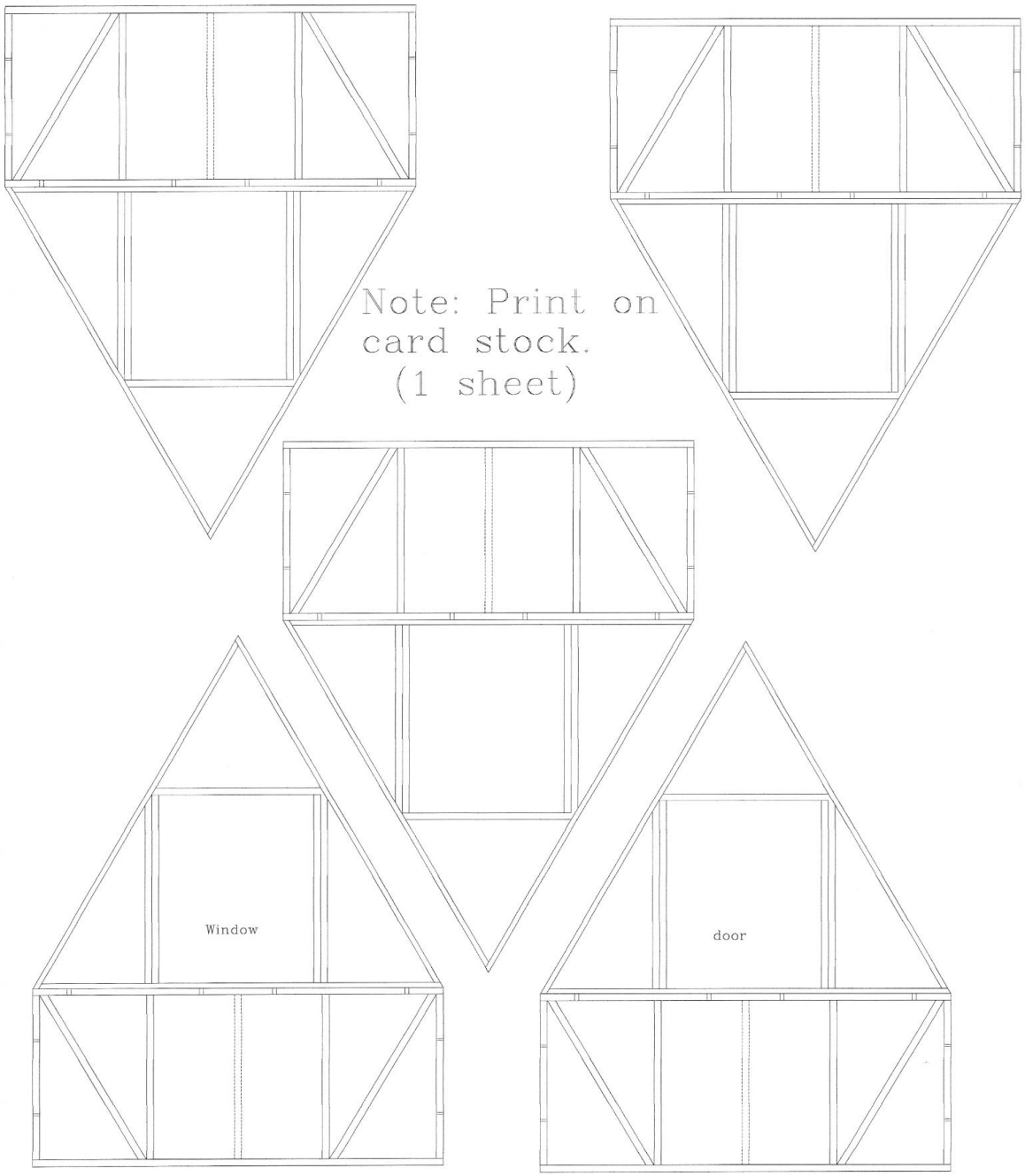

24' Diameter Dome
(paper model)

32f-bl.dwg
1/21/02 rlc

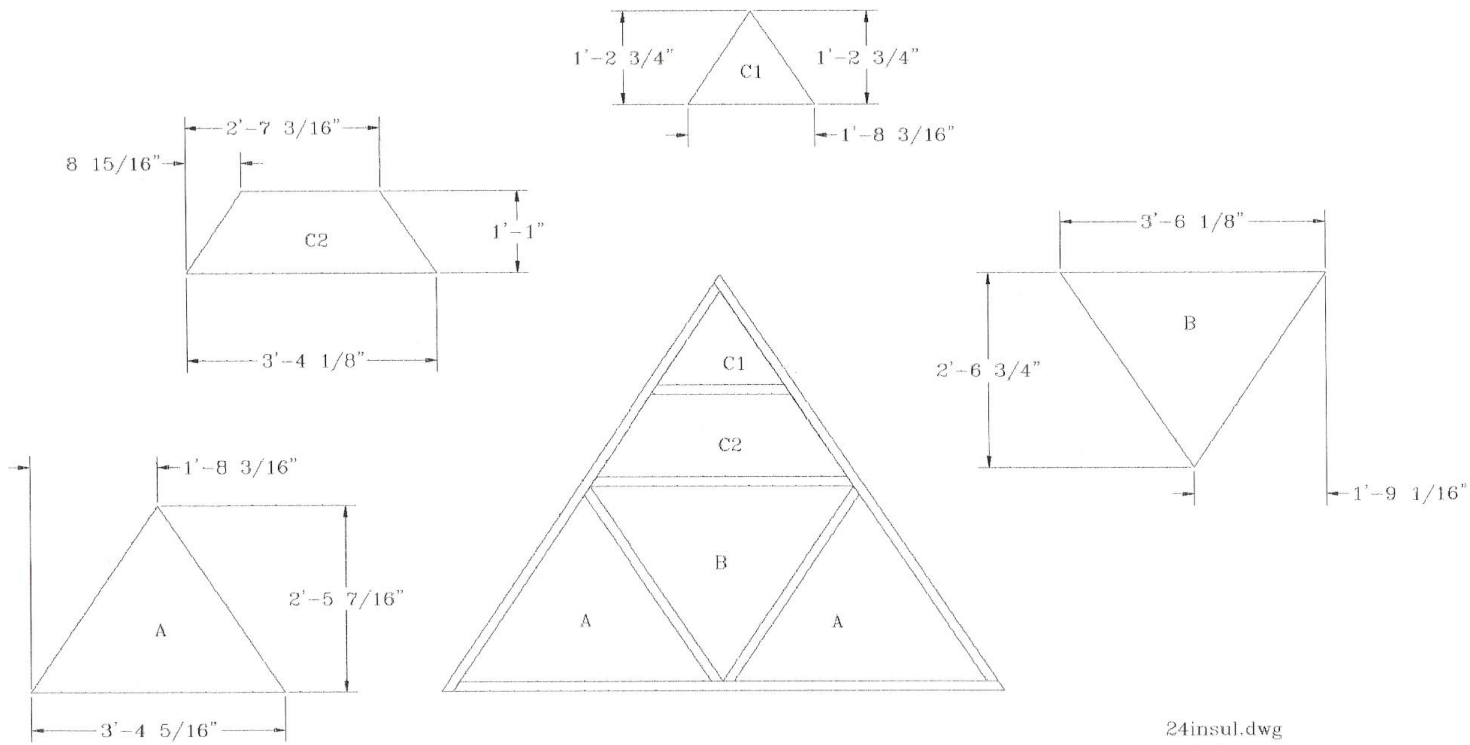

Pentagon Insulation Patterns

24insul.dwg
9/7/99 rlc
revised 1/14/02 rlc

24' Dome Insulating Cut Out Patterns

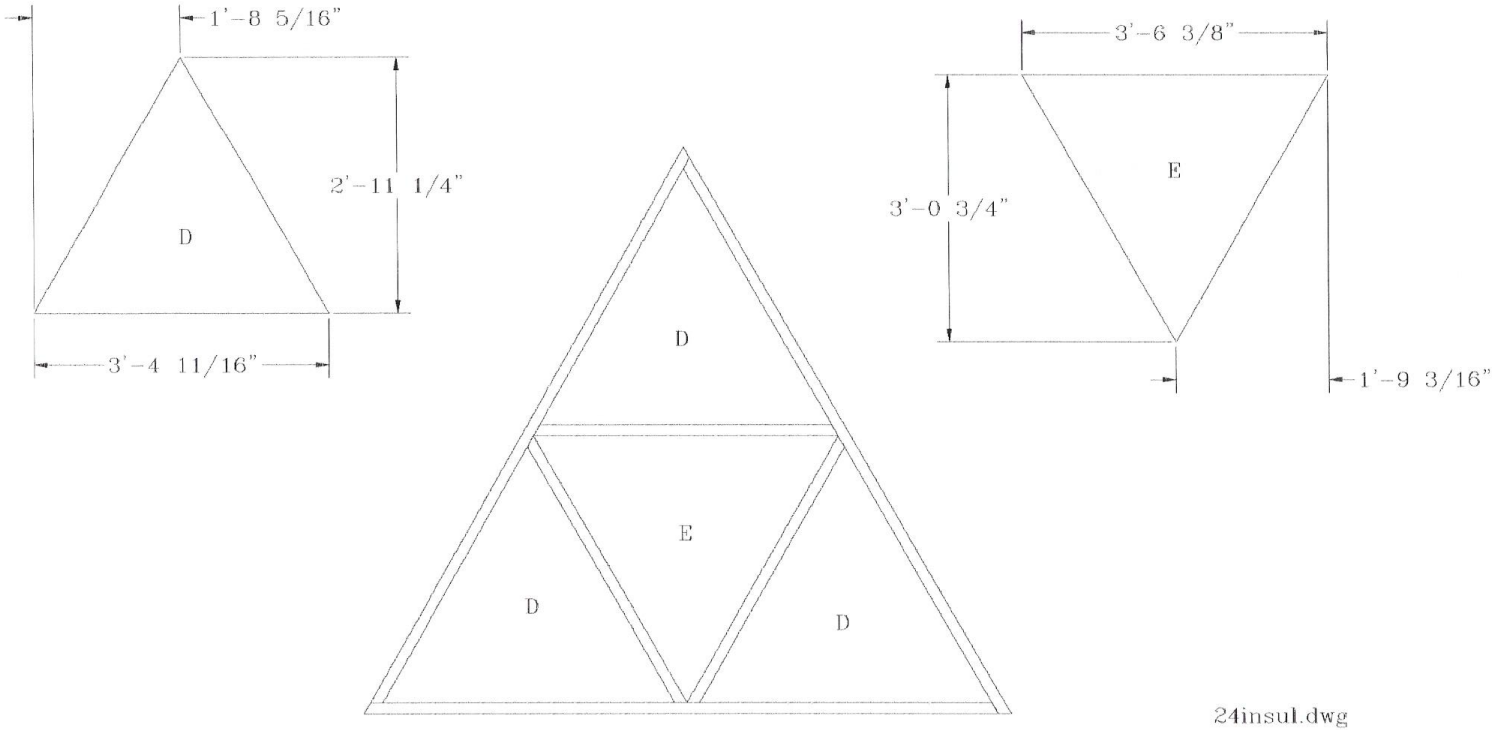

24insul.dwg
9/7/99 rlc
revised 1/14/02 rlc

Equal lateral Insulation Patterns

24' Dome Inslating Cut Out Patterns

14-2freq.dwg
8/3/00 rlc
revised 7/3/01 rlc

(5)

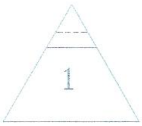

(5)

Equal lateral Panels

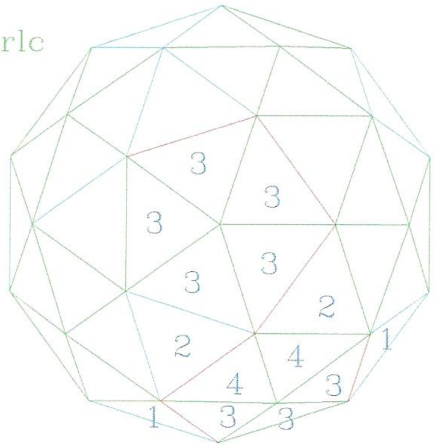

Plan View

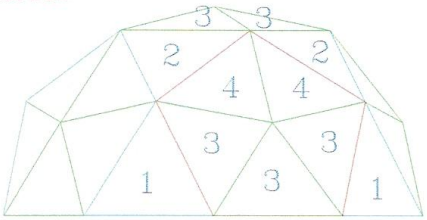

Side View

3" lap

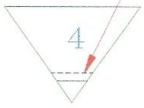

(10)

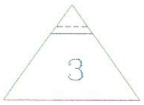

(20)

Pentagon Panels

Preapplied Seal & Peal layout

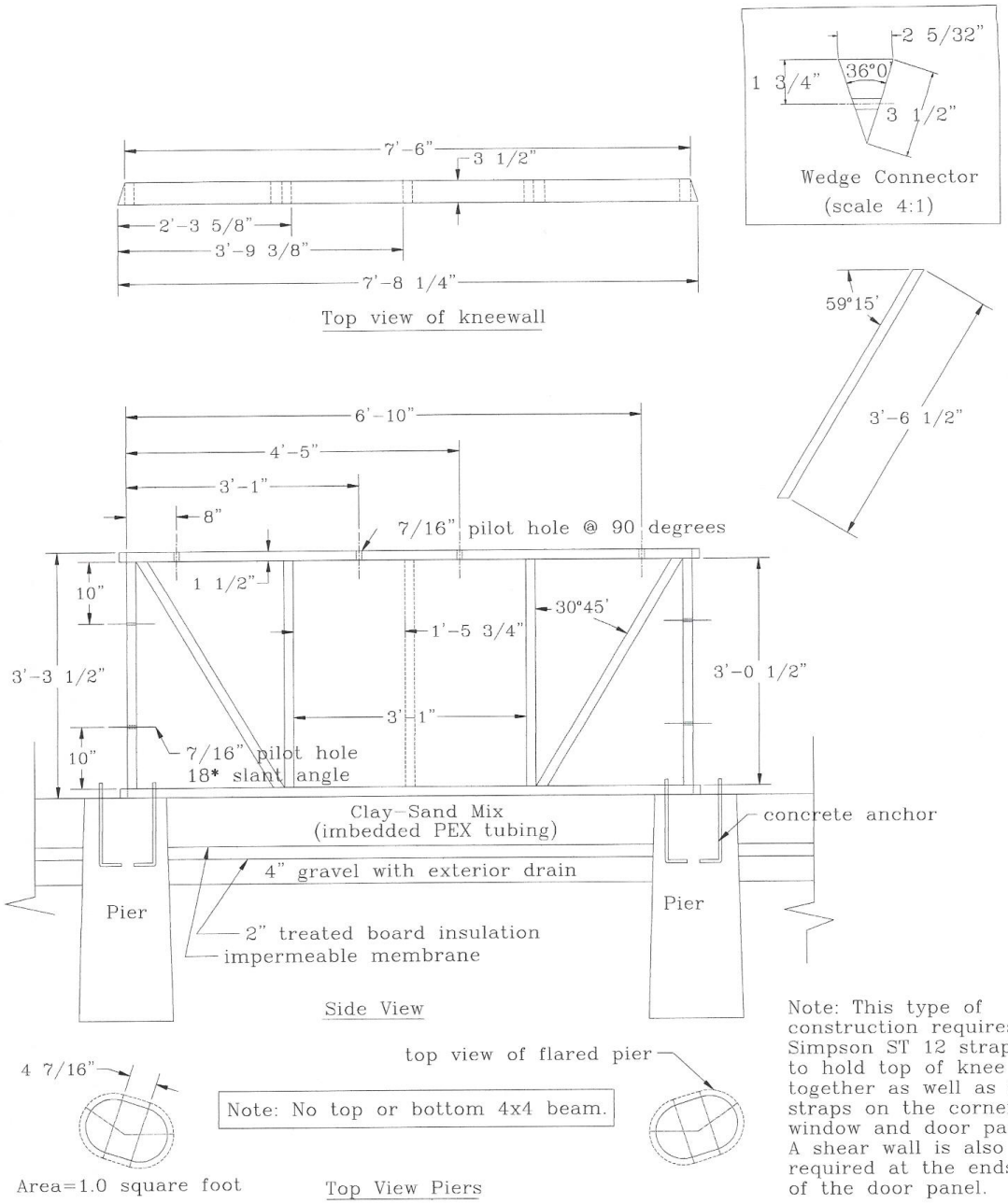

Note: This type of construction requires Simpson ST 12 strap ties to hold top of knee wall together as well as ST12 straps on the corners of window and door panels. A shear wall is also required at the ends of the door panel.

Alternate Kneewall on Piers

(Type II)
(24' diameter dome)

24knw2.gif
24domt3b.dwg
24slab.dwg.
1/13/02 rlc
revised 12/25/03 rlc

24' Mountain Truss
Material List

Location	Description	Cost/Item*	Quantity	Cost
Alternate Type II				
Support Kneewall				
	2"x4"x8'CCA (panel)	2.30	30	69.00
	2"x4"x10'CCA (panel)	3.00	15	45.00
	4"x4"x8' fir (for wedges)*	9.50	1	9.50
	3/8" x 5" bolts**	0.35/each	20	7.00
	3/8" nuts	0.10/each	20	2.00
	3/8" washers	0.05/each	20	1.00
	4'x8'x½" plywood CCA	15.00/each	10 sheets	150.00
	3"" deck screws	5.00/1b	5 lbs	15.00
	Simpson Strap Tie ST12***	1.00/each	25	25.00
			sub total	325.50
Alternate concrete Piers				
	80# concrete mix	2.50/each	50 sacks	125.00
	½" x 18" anchor bolts	1.00/each	20 bolts	20.00
			sub total	145.00
			Total	470.50

Notes:

* best quality fir
** Price is 1/3 cost at anchor distributor
*** Strap ties are required to hold top of knee wall together and to tie corners of door and window panels together.
24knel2.wps 3/12/03 rlc

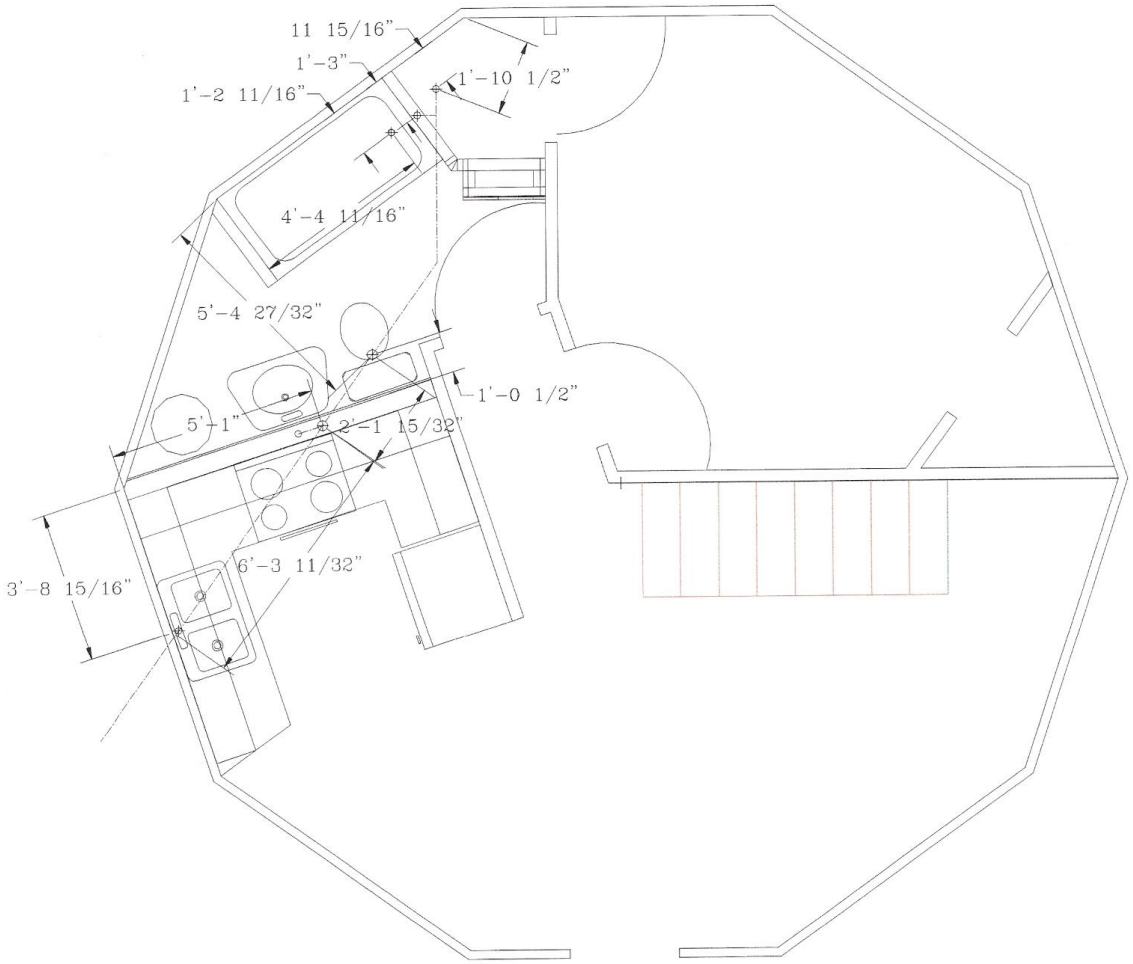

24' Diameter Dome
Plumbing Layout

24plan5.dwg.
11/23/97 rlc
revised 1/15/02 rlc

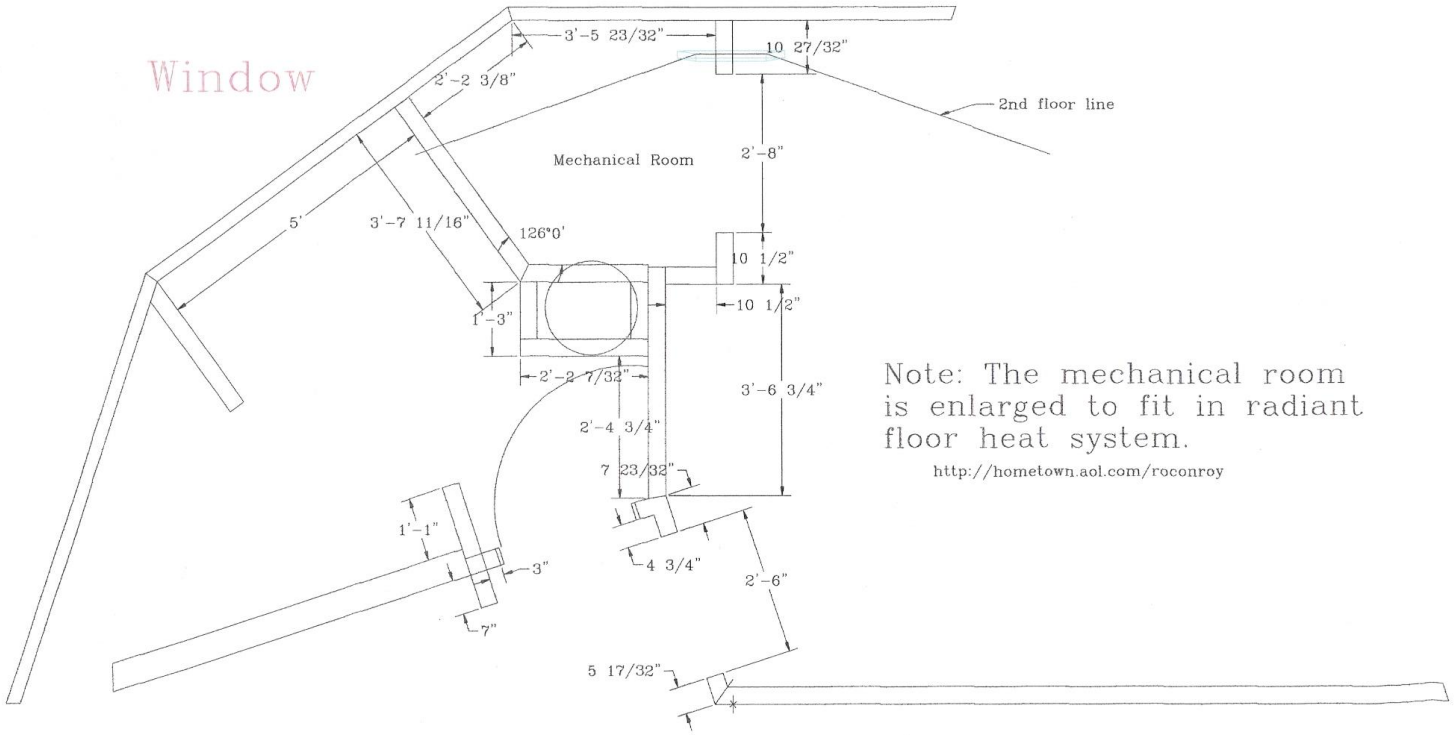

Note: The mechanical room is enlarged to fit in radiant floor heat system.

http://hometown.aol.com/roconroy

Modification to Mechanical Room
24' Diameter Mountain Truss

24plan5.dwg
4/11/03 rlc